DATA SHEET

MLCC Chip Capacitor Size 3035

Serie: I11011

Mat. Code	**X7R**	Material:	**X7R= X7R Material**
Voltage Code	**250**	Voltage:	**250= 25Volt**
Range Code	**106**	Range:	**106= 10µf**

DRW:	Jason	CHKD	Wilson	MATL:	Wilson	TOLERANCE	Mason	DATE	07.02.2011	MLCC Chip Capacitor Size 3035
APPD:	Schumi			FINISH	Jamy		Sheet No.		1 from 14	Serie No.: I11011
										Customer:

www.edcon-components.com
email: info@edcon-components.com

Copyright by EDCON-COMPONENTS

EDCON-COMPONENTS

Structure of Chip Capacitor

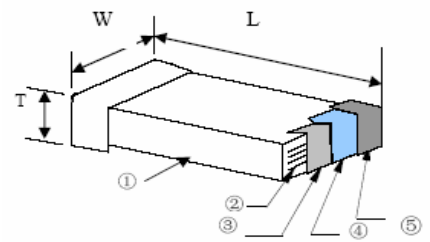

No	Name
1	Ceramic dielectric
2	Inner Electrode
3	Substrate Electrode
4	Nickel Layer
5	Tin Layer

Drawing

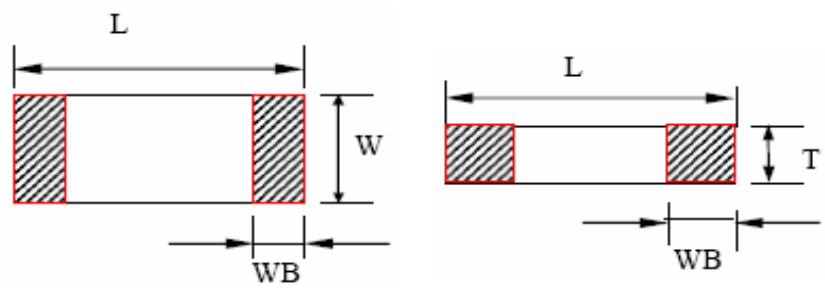

Nominal Capacitance Unit (pf)

Ordering Code	Actual Value
0P5	0,5pf
1R0	1,0pf
102	1000pf
224	220000pf

Note: The first two digits are significant; third digit denotes number of zeros after range; P= decimal point

Dimensions (mm)

Chip-Size Code	L	W	T	WB
3035	7,60	9,00	≤3,0	1,00

Note: We can design according to customer special requirements

Capacitance Tolerance

Ord. Code	B	C	D	F	G	J	K	M	S	Z
Tolerance	0,1pf	0,25pf	0,5pf	1,0%	2,0%	5,0%	10%	20%	.+50% / -20%	.+80% / -20%

Note: These capacitance tolerance B,C,D are just applicable th capacitance that eqals to or less.

Rated Voltage (V)

Code	Actual Value
6V3	6,3
500	50
201	200
102	1000

Note: The first two digits are significant; third digit denotes number of zeros after range; P= decimal point

Dielectric Style

Dielectric Code	CG	HG	LG	PH	RH	SH	TH	UJ	SL	X	B	E	F
Dielectric	COG NPO	HG	LG	PH	RH	SH	TH	UJ	SL	X5R	X7R	Z5U	Y5V

MLCC Chip Capacitor Size 3035

Part No.: **I11011**

Customer:

DRW:	Jason	CHKD	Wilson	MATL:	Wilson	TOLERANCE	Mason	DATE	07.02.2011
APPD:	Schumi			FINISH	Jamy		Sheet No.		2 from 14

www.edcon-components.com

email: info@edcon-components.com

Copyright by EDCON-COMPONENTS

EDCON-COMPONENTS

Terminal Material Styles

Ordering Code	Termination Material
S	(Silver Solderable Termination)
C	(Copper Solderable Termination)
N	(Nickel Barrier Termination)

Temperature Coefficient / Characteristics

Dielectric	Temperature Coefficient	Temperature Point
COG/NPO	. 0 +/- 30 ppm/°C	.+20°C > -55°C > +20°C >+125°C
HG	.-33 +/-30 ppm/°C	.+20°C > -55°C > +20°C >+85°C
LG	. -75 +/-30 ppm/°C	.+20°C > -55°C > +20°C >+85°C
CH	0 +/-60 ppm/°C	.+20°C > -55°C > +20°C >+85°C
PH	. -150 +/-60 ppm/°C	.+20°C > -55°C > +20°C >+85°C
RH	. -220 +/-60 ppm/°C	.+20°C > -55°C > +20°C >+85°C
SH	. -330 +/-60 ppm/°C	.+20°C > -55°C > +20°C >+85°C
TH	. -470 +/-60 ppm/°C	.+20°C > -55°C > +20°C >+85°C
UJ	. -750 +/-120 ppm/°C	.+20°C > -55°C > +20°C >+85°C
SL	. -1000 +140 ppm/°C	.+20°C > -55°C > +20°C >+85°C
X7R	. +/-15%	.+20°C > -55°C > +20°C >+125°C
X5R	. +/-15%	.+20°C > -55°C > +20°C >+85°C
Z5U	. -56% ~ +22%	.+20°C > -55°C > +20°C >+85°C
Y5V	. -80% ~ +30%	.+20°C > -55°C > +20°C >+85°C

Note: Nominal Temperature coefficient and allowed tolerance of class 1 are decided by the changing of the capacitance between 20°C and 85°C

Application

Hi-Q COG capacitance are ideally suited for RF and Microwave application requiring high Q, low ESR, and high resonant frequency

Note for CQ

The following Q value is just confirmed by general customer. If there is a higher requirement for Q value requirements, we can design and produce according to the special requirements.

For the customer whose requirements for frequency is between 1MHz and 2,4GHz or higher frequency, we can design it according to theri requierements. The frequency of CQ is a little bit higher than that of CF. Please choose them according to your requirements.

Capacitance (pf)	Q value at 300MHz		Capacitance (pf)	Q value at 300MHz		Capacitance (pf)	Q value at 300MHz	
	O805	O603		O805	O603		O805	O603
4,7	1000	800	11	450	360	24	200	160
5,2	900	720	12	400	320	27	175	140
5,6	850	680	13	375	300	30	150	120
6,2	800	640	14	350	280	33	140	112
6,8	700	560	15	325	260	36	130	104
7,5	650	20	16	300	240	39	120	96
8,2	575	460	18	250	200	43	110	88
9,1	525	420	20	225	180	47	100	80
10	500	400	22	215	172			

MLCC Chip Capacitor Size 3035

Part No.: **I11011**

Customer:

DRW:	Jason	CHKD	Wilson	MATL:	Wilson	TOLERANCE	Mason	DATE	07.02.2011
APPD:	Schumi			FINISH	Jamy		Sheet No.		3 from 14

www.edcon-components.com

email: info@edcon-components.com

Copyright by EDCON-COMPONENTS

EDCON COMPONENTS
A MEMBER OF EDCON-GROUP

Note for CF

The following Q value is just confirmed by general customer. If there is a higher requirement for Q value requirements, we can design and produce according to the special requirements.

For the customer whose requirements for frequency is between 1MHz and 2,4GHz or higher frequency, we can design it according to theri requierements. The frequency of CQ is a little bit higher than that of CF. Please choose them according to your requirements.

Capacitance (pf)	Q value at 300MHz		Capacitance (pf)	Q value at 300MHz		Capacitance (pf)	Q value at 300MHz	
	O805	O603		O805	O603		O805	O603
4,7	400	320	20	90	72	91	24	20
5,2	36	288	22	86	69	100	22	18
5,6	340	272	24	80	64	110	20	16
6,2	320	256	27	70	56	120	28	15
6,8	280	224	30	60	48	130	16	13
7,5	260	208	33	56	45			
8,2	230	184	36	52	42			
9,1	210	168	39	48	39			
10	200	160	43	44	36			
11	180	144	47	40	32			
12	160	128	51	36	29			
13	150	120	56	34	28			
14	140	112	62	32	26			
15	130	104	68	30	24			
16	120	96	75	28	23			
18	100	80	82	26	20			

High Voltage MLCC

Middle & High Voltage MLCC is a kind of special design MLCC that bases on the technology of general MLCC. This kind of MLCC has stable high voltage reliability and suitable to SMT. Middle & igh Voltage MLCC is widely applicable for many direct high voltage circuits in which it can improve the performance of the circuit.

Application

Analog & Digital modems
LAN & WAN Inteface
Lighting Ballast Circuits
Voltage Multipliers
DC-DC-Converter
Back-Lighting Inverters

Measurement Method for High Voltage MLCC

Rated Voltage Range	Measuring Method
500V ≤Vr ≤ 1000V	Force 150% Rated Voltage for 5seconds. Max. current should not exceed 50mA
1000V ≤Vr ≤ 2000V	Force 120% Rated Voltage for 5seconds. Max. current should not exceed 50mA
2000V ≤Vr ≤ 5000V	Force 120% Rated Voltage for 5seconds. Max. current should not exceed 10mA

MLCC Chip Capacitor Size 3035

Part No.: **I11011**

Customer:

DRW:	Jason	CHKD	Wilson	MATL:	Wilson	TOLERANCE	Mason	DATE	07.02.2011
APPD:	Schumi			FINISH	Jamy		Sheet No.		4 from 14

Copyright by EDCON-COMPONENTS

EDCON COMPONENTS
A MEMBER OF EDCON-GROUP

Reliability Test

Item	Technical specification				Test Methods and Remarks				
Capacitance	Class I	Should be within the specified tolerance			Capacitance		Measuring Frequency		Measuring Voltage
					≤1000pf		1MHz +/- 10%		1,0 Tol. 0,2Vrms
					≥1000pf		1KHz +/- 10%		
DF, tan Dissipation Favctor	Class II	Should be within the specified tolerance			C≤10µF		Test Frequency 1KHZ +/-10%		
							Test Voltage 1,0 +/- 0,2Vrms		
					C>10µF		X7R, Y5V		
							Test Frequency 1KHZ +/-10%		
							Test Voltage 1,0 +/- 0,2Vrms		
					Z5U		Z5U		
							Test Frequency 1KHZ +/-10%		
							Test Voltage 1,0 +/- 0,2Vrms		
	Class I	DF≤ 0,15%			Capacitance		Measuring Frequency		Measuring Voltage
					≤1000pf		1MHz +/- 10%		1,0 Tol. 0,2Vrms
					≥1000pf		1KHz +/- 10%		
	Class II	X7R	>50V	25V	16V	10V	6,3V	C= 10µF	
			≤ 2,5%	≤ 3,5%	≤ 3,5%	≤ 5%	≤ 5% (C< 3,3µF)	Test Frequency 1KHZ +/-10%	
							≤ 10% (C≥ 3,3µF)	Test Voltage 1,0 +/- 0,2Vrms	

MLCC Chip Capacitor Size 3035

Part No.: **I11011**

DRW:	Jason	CHKD	Wilson	MATL:	Wilson	TOLERANCE	Mason	DATE	07.02.2011
APPD:	Schumi			FINISH	Jamy		Sheet No.		5 from 14

Customer:

Copyright by EDCON-COMPONENTS

EDCON COMPONENTS
A MEMBER OF EDCON-GROUP

Reliability Test

DF, tan Dissipation Favctor	Class II	Y5V / Z5U	≥25V	16V	10V	6,3V	C= 10µF X7R; Y5V
			≤ 7,0%	≤12,5%	≤12,5%	≤12,5%	Test Frequency 120Hz +/-20Hz
			(C< 1,0µF)				Test Voltage 0,5 +/- 0,1Vrms
			≤ 9,0%				Test Frequency 0,1KHz
			(C≥ 1,0µF)				Test Voltage 0,5 +/- 0,05Vrms
(IR) Insulation Resistance	Class I	C≤ 10nf, Ri ≥50000MΩ					Measuring Voltage: Rated Voltage Duration: 60Sec. +/- 5s
		C> 10nf, Ri ≥ 500S					
	Class II	X7R	C≤ 25nf, Ri ≥10000MΩ				
			C> 25nf, Ri ≥ 100S				
		Y5V / Z5U	C≤ 25nf, Ri ≥4000MΩ				
			C> 25nf, Ri ≥ 100S				

Item	Technical Specification	Test Method and Remarks
(DWV) Dielectric Withstanding Voltage	No Breakdown or damage	Measuring Voltage: Class I: 300% Rated Voltage Class II: 250% Rated Voltage Duration : 5 +/-1sec Charge / Discharge Current : 50mA max. This method excludes high voltage MLCC
Solderability	At least 95% of the terminal electrode is covered ba new solder. Visual Appearance: No visible damage:	Solder Temperature: 235°C +/- 5°C Duration : 2 +/-0,5sec

MLCC Chip Capacitor Size 3035

Part No.: **I11011**

DRW:	Jason	CHKD	Wilson	MATL:	Wilson	TOLERANCE	Mason	DATE	07.02.2011
APPD:	Schumi			FINISH	Jamy		Sheet No.		6 from 14

Customer:

email: info@edcon-components.com

Copyright by EDCON-COMPONENTS

EDCON COMPONENTS
A MEMBER OF EDCON-GROUP

Reliability Test

Resistance to Soldering Heat	Item	NPO to SL	X7R	Y5V	Z5U	Preheating conditions: 100 to 200°C +/- 10°C 2mon. Solder Temperature: 265°C +/- 5°C Duration 5sec. +/- 1sec. Clean the capacitor with solvent and examine it with a 10x(min) microscope. Recovery time : 24hrs +/-2hrs Recovery conditions: Room temperature
	C/C	≤ 0,5%	. -5 ~ +10%	. -10 ~ +20%		
	DF	Same to initial Value				
	IR	Same to initial Value				
	Apperance: No visible damage. At least 95% of the terminal electrode is covered by new solder.					
Resistance to Flexure of Substrate (Bending Strength)	Apperance: No visible damage.					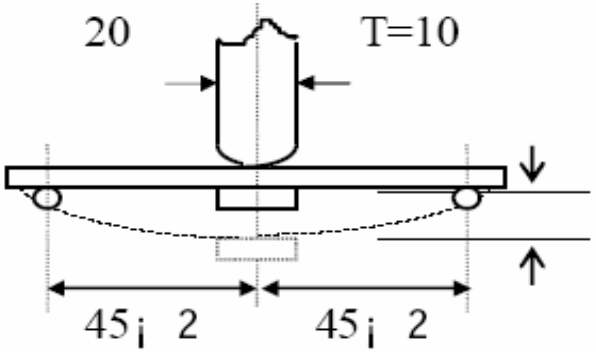
	C/C	≤ +/- 10%				Test Board: Al2O3 or PCB Wrap: 1mm Speed 0,5mm/sec. Unit: mm The measurement should be mader with the board in bending position.

MLCC Chip Capacitor Size 3035

Part No.: **I11011**

Customer:

DRW:	Jason	CHKD	Wilson	MATL:	Wilson	TOLERANCE	Mason	DATE	07.02.2011
APPD:	Schumi			FINISH	Jamy		Sheet No.		7 from 14

Copyright by EDCON-COMPONENTS

EDCON COMPONENTS
A MEMBER OF EDCON-GROUP

Reliability Test

Item	Technical specification		Test Methods and Remarks		
Termination Adhesion	No visible damage		Applied Force: 5N		
			Duration: 10sec +/- 1sec		
Temperature Cycle	Class I : ≤+/-1% or 1pf whichever is larger. Class II: B= ≤ +/-10% E,F: ≤ +/-20%		Preheating conditions: up-category temperature 1hrs Recovery time: 24hrs +/-1hrs Initial Measurement Cycling Tiems 5times, 1cycle, 4steps		
			Step	Temperature (°C)	Time (min)
			1	Low-category temp. (NPO / X7R / Y5V / Z5U)	30
			2	Normal Temp. (+20)	2~3
			3	Up-category temp. (NPO / X7R / Y5V / Z5U)	30
			4	Normal Temp. (+20)	2~3
			Recovery time after test 24hrs +/- 2hrs		
Moisture Resistance	C/C	Class I ≤ +/-2% or 1pf whichever is larger	Temperature: 40°C +/-2°C Humidity: 90~95% RH Voltage: Rated Voltage Duration: 500hrs Charge/Discharge Current: 50mA max. Recovery Time; 24hrs (Class I) or 48hrs (Class II)		
		Class II B: ≤ +/-10%			
		Class II E,F: ≤ +/-30%			
	DF	Not more than twice of initial value			
	IR	Class I: Ri≥2500MΩ Ri/Cr ≥25sec whichever is smaller			
		Class II: Ri≥1000MΩ Ri/Cr ≥25sec whichever is smaller			
	Visual Apperance: No visible damage				

Note: Pretratment (only for class 2 capacitor)

Pretradment (only for class 2 capacitor) is a method to treat the capacitor before measurement. First place the capacitor in the up-category temperasture or other specified higher temperature environment for 1 hour. Then recovery the capacitor at standard pressure conditions for 24hours +/-1hrs..

MLCC Chip Capacitor Size 3035

Part No.: **I11011**

Customer:

DRW:	Jason	CHKD	Wilson	MATL:	Wilson	TOLERANCE	Mason	DATE	07.02.2011
APPD:	Schumi			FINISH	Jamy		Sheet No.		8 from 14

Copyright by EDCON-COMPONENTS

EDCON COMPONENTS
A MEMBER OF EDCON-GROUP

Package Conditions

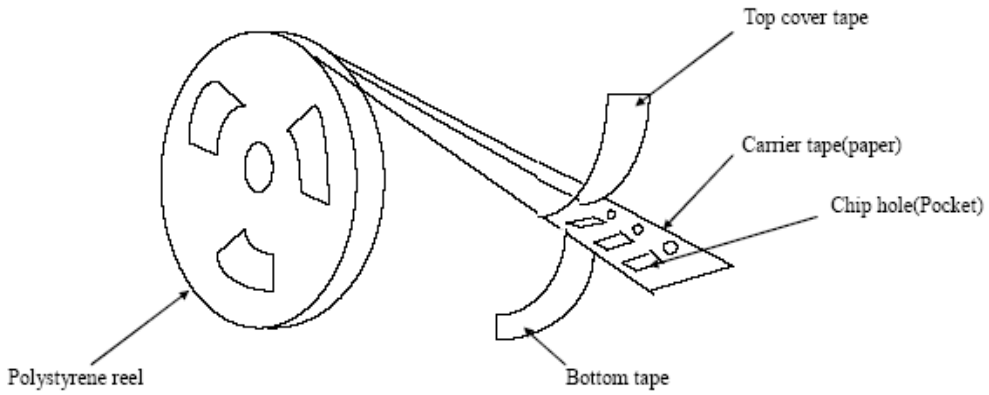

Dimension of paper taping for size 0603, 0805, 1206

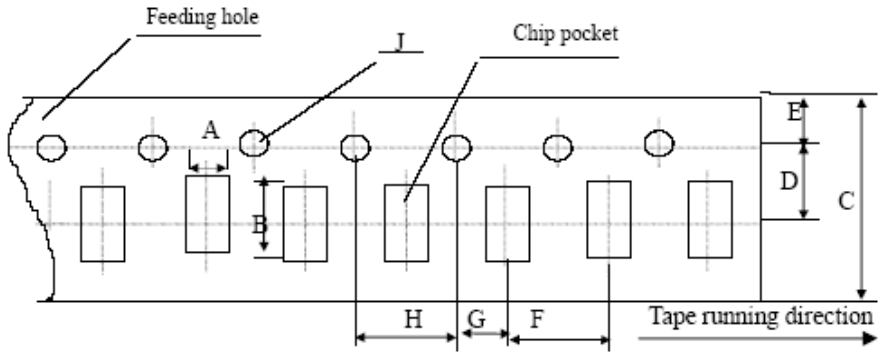

Paper Size Size Code	A	B	C	D	E	F	G	H	J	T
0603	1,10 ±0,20	1,90 ±0,20	8,00 ±0,20	3,50 ±0,05	1,75 ±0,10	4,00 ±0,10	2,00 ±0,10	4,00 ±0,10	1,50 ±0,10	1,10 below
0805	1,45 ±0,20	2,30 ±0,20	8,00 ±0,20	3,50 ±0,05	1,75 ±0,10	4,00 ±0,10	2,00 ±0,10	4,00 ±0,10	1,50 ±0,10	1,10 below
1206	1,80 ±0,20	3,40 ±0,20	8,00 ±0,20	3,50 ±0,05	1,75 ±0,10	4,00 ±0,10	2,00 ±0,10	4,00 ±0,10	1,50 ±0,10	1,10 below

Dimension of paper taping for size 0402

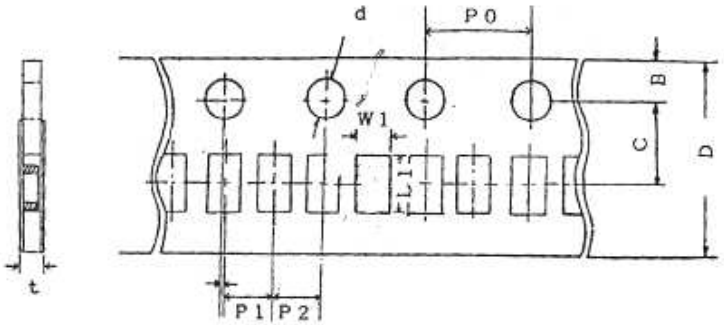

Code	W1	L1	D	C	B	P1	P2	P0	d	t
0402	0,65	1,15	8,0	3,5	1,75	2	2	4	1,5	0,8
	±0,20	±0,20	±0,20	±0,05	±0,10	±0,05	±0,05	±0,05	±0,10	below

MLCC Chip Capacitor Size 3035

Part No.: **I11011**

Customer:

DRW:	Jason	CHKD	Wilson	MATL:	Wilson	TOLERANCE	Mason	DATE	07.02.2011
APPD:	Schumi			FINISH	Jamy		Sheet No.		9 from 14

Copyright by EDCON-COMPONENTS

EDCON COMPONENTS
A MEMBER OF EDCON-GROUP

Package Conditions

Dimension of paper taping for size 0805 ~ 1812

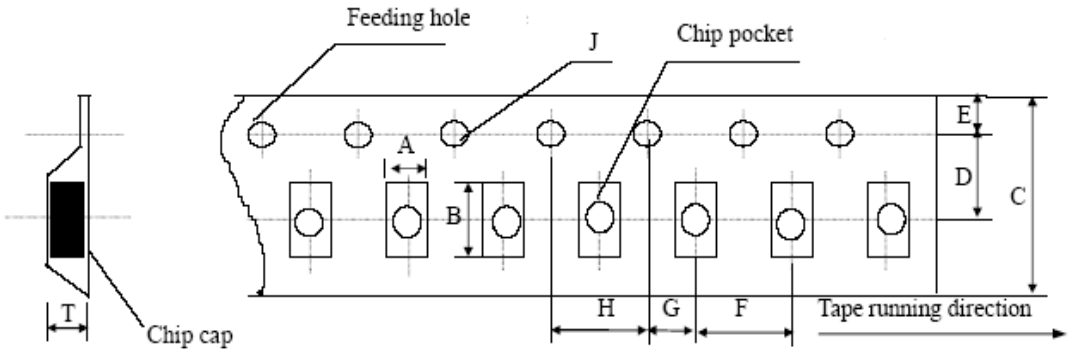

Paper Size / Size Code	A	B	C	D	E	F	G	H	J	T
0805	1,55 ±0,20	2,35 ±0,20	8,00 ±0,20	3,50 ±0,05	1,75 ±0,10	4,00 ±0,10	2,00 ±0,10	4,00 ±0,10	1,50 ±0,10	1,50 below
1206	1,95 ±0,20	3,60 ±0,20	8,00 ±0,20	3,50 ±0,05	1,75 ±0,10	4,00 ±0,10	2,00 ±0,10	4,00 ±0,10	1,50 ±0,10	1,50 below
1210	2,70 ±0,10	3,42 ±0,10	8,00 ±0,10	3,50 ±0,05	1,75 ±0,10	4,00 ±0,10	2,00 ±0,10	4,00 ±0,10	1,55 ±0,10	1,55 ±0,10
1808	2,20 ±0,10	4,95 ±0,10	12,00 ±0,10	5,50 ±0,05	1,75 ±0,10	4,00 ±0,10	2,00 ±0,10	4,00 ±0,10	1,50 ±0,10	1,80 ±0,10
1812	3,66 ±0,10	4,95 ±0,10	12,00 ±0,10	5,50 ±0,05	1,75 ±0,10	8,00 ±0,10	2,00 ±0,10	4,00 ±0,10	1,55 ±0,10	1,85 ±0,10

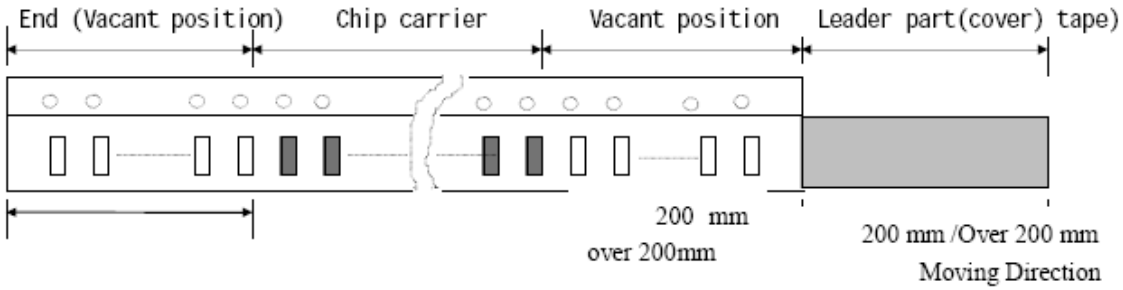

MLCC Chip Capacitor Size 3035

Part No.: **I11011**

DRW:	Jason	CHKD	Wilson	MATL:	Wilson	TOLERANCE	Mason	DATE	07.02.2011
APPD:	Schumi			FINISH	Jamy		Sheet No.		10 from 14

Customer:

Copyright by EDCON-COMPONENTS

EDCON COMPONENTS
A MEMBER OF EDCON-GROUP

Package Conditions

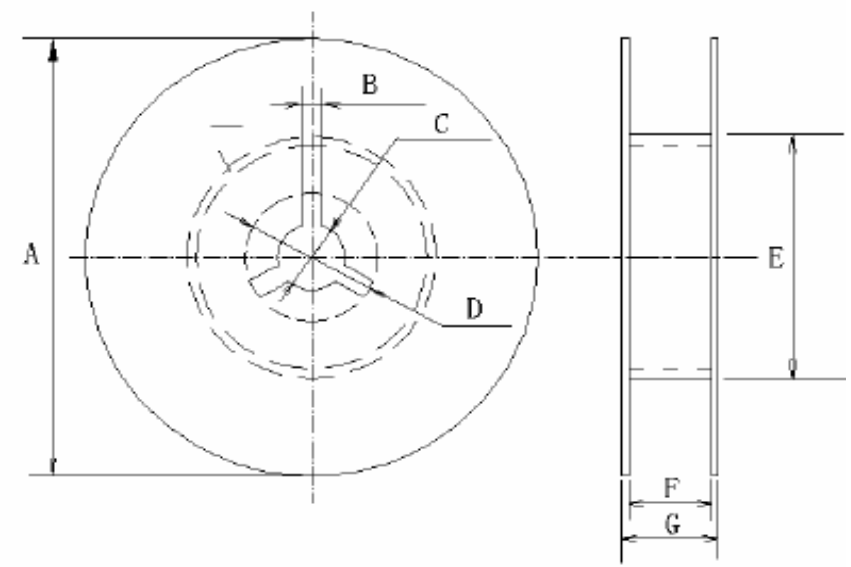

Dimension of Reel (mm)

	A	B	C	D	E	F	G
7`Reel	Ø178 ± 2,0	3,0	Ø13 ± 0,5	Ø21 ± 0,8	Ø50 or more	Ø10 ± 1,5	12 max.
13`Reel	Ø330± 2,0	3,0	Ø13 ± 0,5	Ø21 ± 0,8	Ø50 or more	Ø10 ± 1,5	12 max.

Taping Specification

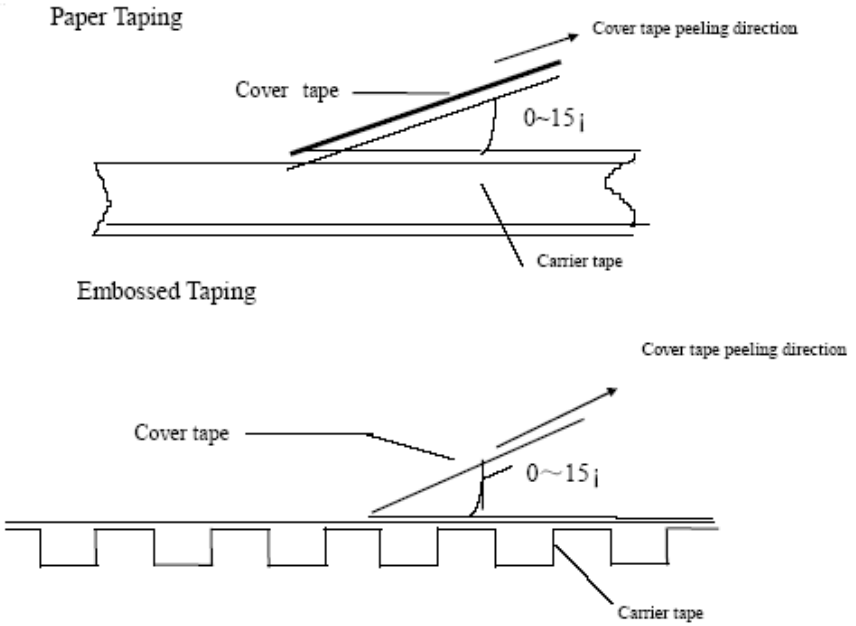

Standard: 0,1N < peeling stgrength < 0,7N

No paper dirty remains on the scotch when peeling, and sticks to top an bottem tape

MLCC Chip Capacitor Size 3035

Part No.: **I11011**

DRW:	Jason	CHKD	Wilson	MATL:	Wilson	TOLERANCE	Mason	DATE	07.02.2011
APPD:	Schumi			FINISH	Jamy		Sheet No.		11 from 14

Customer:

Copyright by EDCON-COMPONENTS

Packing Quantity

	Packing Style Quantity			
Size	PT	ET	BC	BP
0402	10000	--------	20000	5000
0603	5000	--------	15000	5000
0805	5000	2500	10000	5000
1206	5000	2500	5000	5000
1210	--------	2000	--------	2000
1808	--------	2000	--------	2000
1812	--------	2000	--------	2000
2225	--------	--------	--------	500
3035	--------	--------	--------	--------

Note: We can choose packing style and quantity can be according to the customer requirement

Soldering Informations

Storage Methods

The guaranteed period for solderability is 6 mounth (Under deliver package conditions).
Storage conditions:
Temperature: 5~40°C
Relative Humidity: 20~70%

Precausions for use

The Multilayer Ceramic Capacitor (MLCC) may fail in a short circuit modern in an open circuit mode when subjected to severe conditions of electrical and / or mechanical stress beyond the specified rating and specified conditions in the specification, which will result in burn out, flaming or glowing in the worst case.

Following precautions for safety and Apllication Notes shall be taken in your major considaration. If you have a question about the precautions füor handling, please consult our engineering department of our factory.

Manual Soldering

Manual Soldering can pose a great risk of ceramic thermal cracks in capacitos. The hot soldering iron tip comes into direct contact witrh the end terminations, and operator careless may cause the tip of the soldering iron to come into direct contact with the ceramic body of the capacitor. Therfore the soldering iron must be handled carefully, and oay much attention to the selection of the soldering iron tip and temperature contact of the tip.

MLCC Chip Capacitor Size 3035

Part No.: **I11011**

Customer:

DRW:	Jason	CHKD	Wilson	MATL:	Wilson	TOLERANCE	Mason	DATE	07.02.2011
APPD:	Schumi			FINISH	Jamy		Sheet No.		12 from 14

Copyright by EDCON-COMPONENTS

Soldering Profile Curve

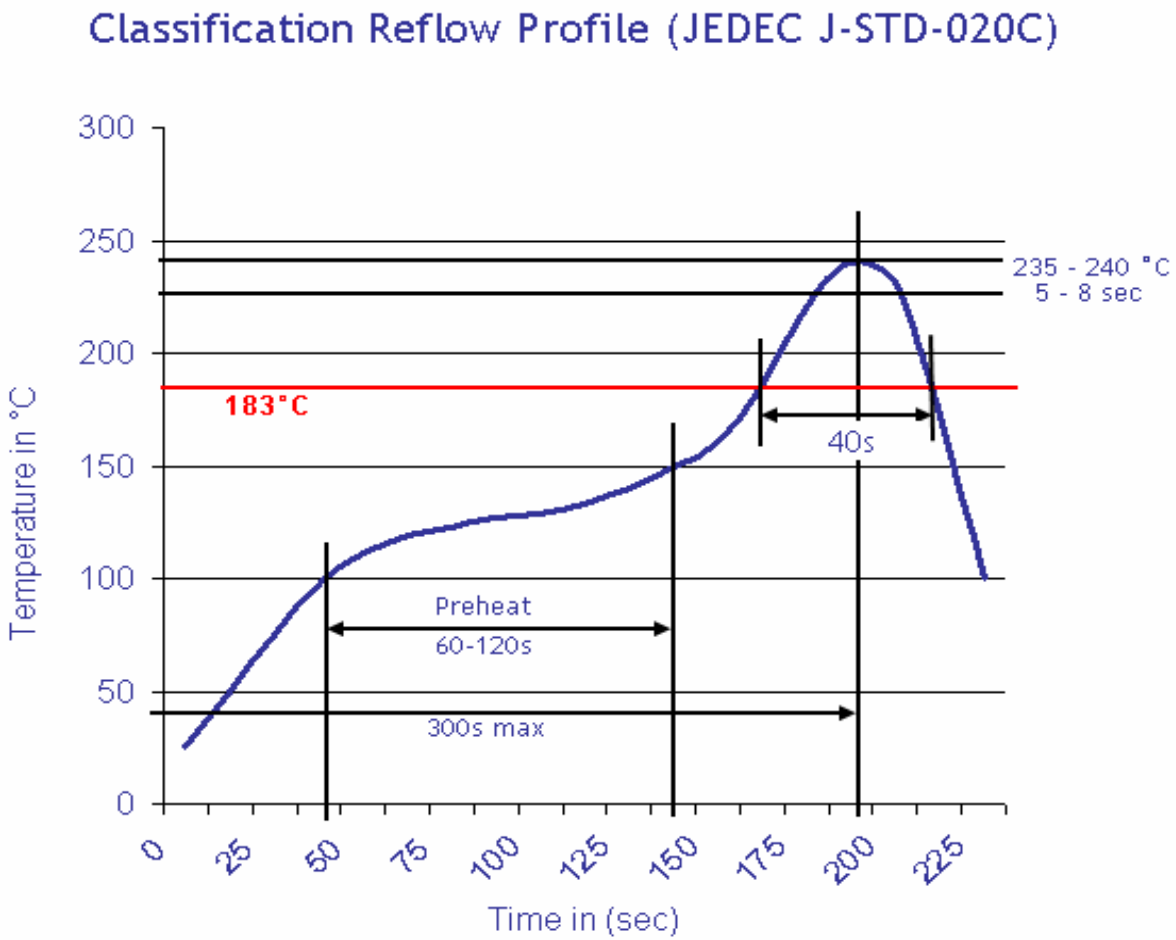

Too much solder
Cracks tend occur due to large stress

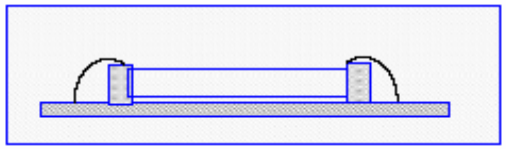

Not enought solder
Weak holding force may cause bad. connection between the capacitor and PCB

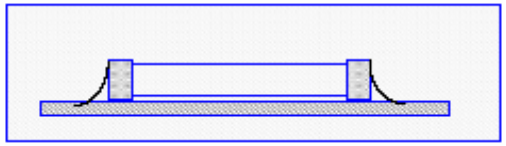

DRW:	Jason	CHKD	Wilson	MATL:	Wilson	TOLERANCE	Mason	DATE	07.02.2011	MLCC Chip Capacitor Size 3035
APPD:	Schumi			FINISH	Jamy		Sheet No.		13 from 14	Part No.: I11011
										Customer:

Copyright by EDCON-COMPONENTS

EDCON COMPONENTS
A MEMBER OF EDCON-GROUP

Ordering Information

Serie		Range	Material	Voltage	Capacitance Tolerance	Termination Material	No Function	No Function	ROHS	Packing	
I11011	-	**106**	**X7R**	**250**	**J**	**N**	**N**	**N**	**R**	**TR**	
MLCC Chip Capacitor Size 3035		**106=** 10µf	**X7R=** X7R Material	**250=** 25Volt	**J=** Tol. 5%	**S=** Silver Termination	**N=** No Function	**N=** No Function	**R=** Rohs Conform	**TR=** Tape / Reel	
					G= Tol. 2%	**C=** Copper Termination			**N=** NON Rohs Conform	**BU=** Bulk Ware	
					F= Tol. 1%	**N=** Nickel Termination					
					D= Tol. 0,5pf						
					C= Tol. 0,25pf						
					B= Tol. 0,1pf						
					Tol.Code **B,C,D** are only for ≤10pf						

MLCC Chip Capacitor Size 3035

Part No.: **I11011**

Customer:

DRW:	Jason	CHKD	Wilson	MATL:	Wilson	TOLERANCE	Mason	DATE	07.02.2011
APPD:	Schumi			FINISH	Jamy		Sheet No.		14 from 14

email: info@edcon-components.com

Copyright by EDCON-COMPONENTS