EDCON COMPONENTS
A MEMBER OF EDCON-GROUP

Technical Specification

Features

Magnetic Core
Wire Wound construction
Heat Resistant epoxy molded resin
High reliability Ideal for automatic insertion
Small Size
Tolerance 10% is standard tighter tolerance available

Applications

VCRs, PDP LCD, TV set
Automotive Systms
Computer Peripheral Equipment
GPS, DC/DC Converter,
XDSL Modem
Electronic Games
Mobile Communikations Equipment
General Electronic Applications

Dimensions

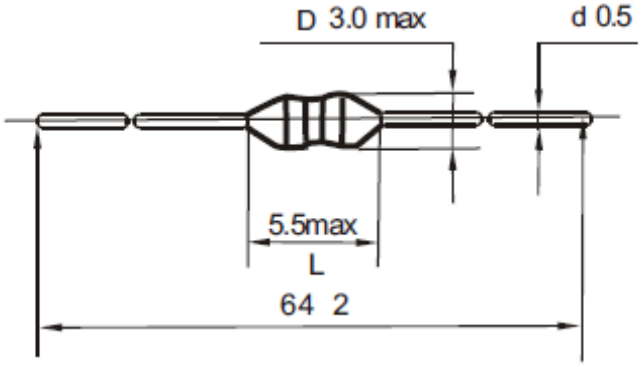

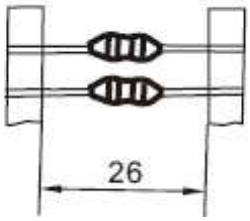

TB26

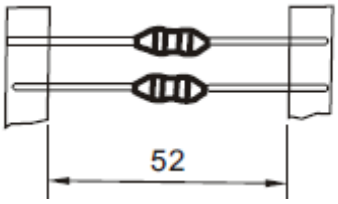

TB52

Electrical Characteristics

Technical Information

Inductance Testing: HP4284A, HP 4285A equivalent
RDC: Quad Tech 1880 Milliohmmeter
Q-HP4342A
SRF-HP4191A or HP4194A
Rated Current L value drop 10% typ.at Idc against ist initial value.
Temperature rise: 40 Max. Reference ambient temper.
Solderability: 75° of the lead wire shall be covered
SolderingMethods: Wave ; Reflow
Operating Temperature: -25°C ~ +85°C
Storage Temperature: -55°C ~ +105°C
Terminal bending strength: 24,5N min.
Moisture resistance: L/L 10% Q/Q 25%

Inductance	Inductance Code	IDC	DCR max.
12µH	120	0,150A	2,500Ω

	Q min.	L-Test Freq.	SRF
	50	25,2MHz	19MHz

THT AXIAL Standard Coated Inductors

Part No.: **S10A14**

Customer:

DRW:	James	CHKD	Jim	MATL:	Wim	DATE	06.08.2008
APPD:	Sarah			FINISH	Jeff	Sheet	1 from 2

Copyright by EDCON-COMPONENTS H.Schmitt

www.edcon-components.com
email: info@edcon-components.com

EDCON COMPONENTS
A MEMBER OF EDCON-GROUP

Soldering Profile

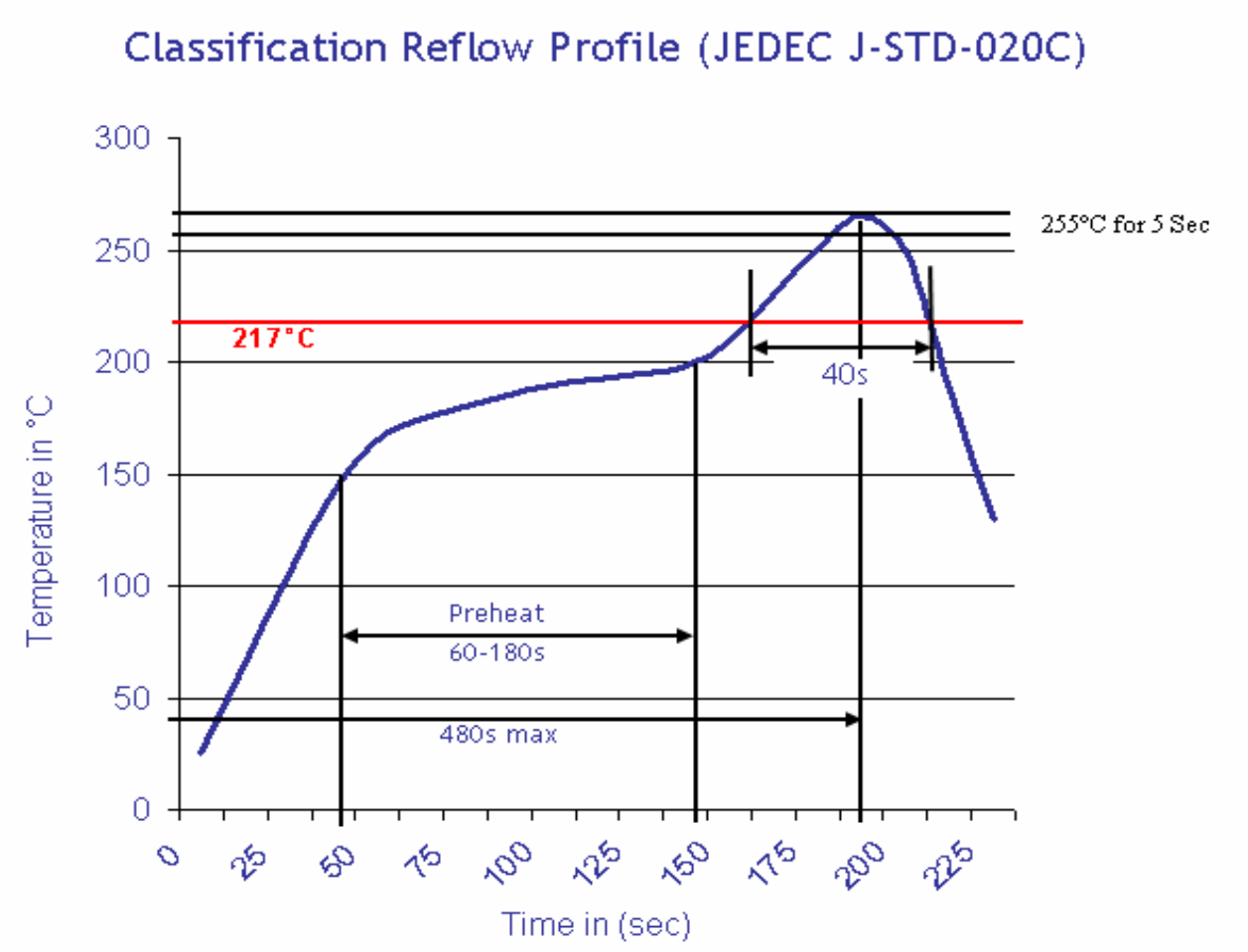

Ordering Information

Serie	Inductance	Tolerance	Function	ROHS	Packing	
S10A14	**120**	**K**	**N**	**R**	**TB52**	
	120= 12µH	**K=** Tol. 10%	**N=** No function	**R=** ROHS conform	**BU=** Bulk Ware	
		J= Tol. 5%		**N=**NON ROHS conform	**TB26=** Tape Box Package	
					TB52= Tape Box Package	

THT AXIAL Standard Coated Inductors

Part No.: **S10A14**

Customer:

DRW:	James	CHKD	Jim	MATL:	Wim	DATE	06.08.2008
APPD:	Sarah			FINISH	Jeff	Sheet	2 from 2

Copyright by EDCON-COMPONENTS H.Schmitt

www.edcon-components.com
email: info@edcon-components.com