EDCON COMPONENTS
A MEMBER OF EDCON-GROUP

Technical Specification

Features

Wire Wound Construction
High Saturation Material
Poleolefin Shrink Tubing
Low DC Resistance
High Reliability

Applications

Switching Regulators
RFI Suppression Filters
SCR and TRIAC Controls Systems
Automotive Systems

Electrical Schematic

Dimensions

C (mm)	D (mm)
20,06	1,62

Dimensions

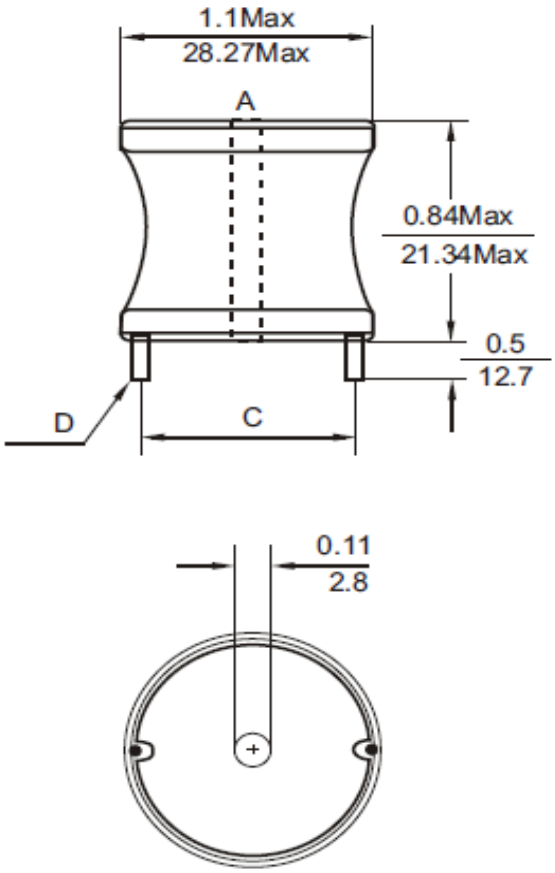

Electrical Characteristics

Technical Information

Testing LCR Bridge, measured @ 1KHz 0,1V HP4284A Equivalent acceptacle
RDC. QuadTech 1880 Milliohmmeter
Rated Current: L value drop 10% typ. At Idc against the initial value Temperature rise 40 Max. Refenrence ambient temperature
Solderability: 75% of the lead wire shall be covered
Solder Methods: Wave, Reflow
Operating Temperature: -40°C ~ +85°C
Storage Temperature: -40°C ~ +125°C
Marking: Inductance and tolerance
Moisture resistance: L/L 10% Q/Q 25%
Note: All specifications subject to change without notice.

Inductance	Inductance Code	IDC	DCR max.
22,0µH	220	13,5A	0,011Ω

THT Radial Extremly High Current

Part No.: **S10R39**

Customer:

DRW:	Jason	CHKD	Jules	MATL:	Wu	DATE	16.05.2009
APPD:	Join			FINISH	Shieh	Sheet	1 from 2

Copyright by EDCON-COMPONENTS H.Schmitt 20.6.2008

www.edcon-components.com
email: info@edcon-components.com

EDCON COMPONENTS
A MEMBER OF EDCON-GROUP

Soldering Profile

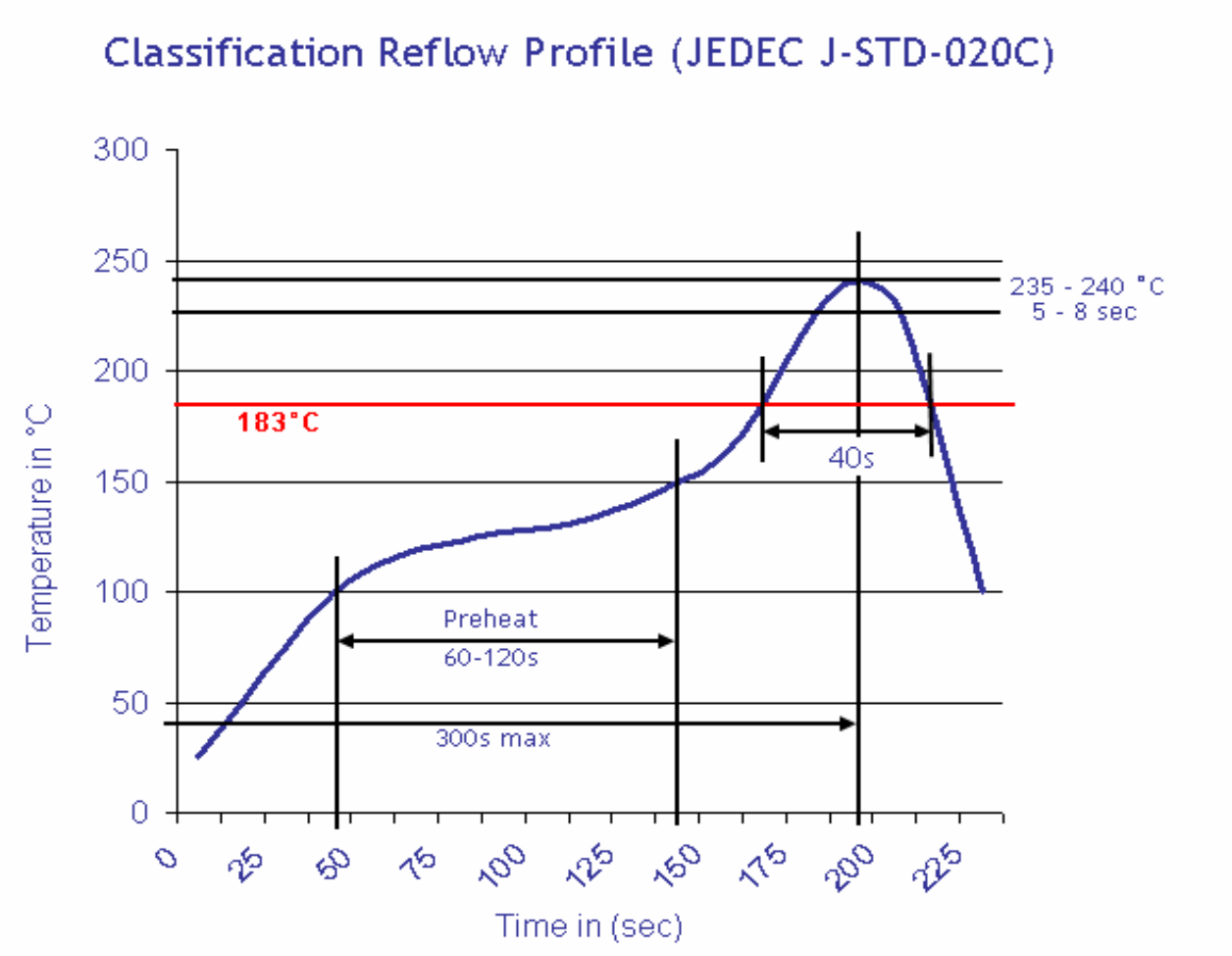

Ordering Information

Serie	Inductance	Tolerance	No Function	ROHS	Packing	
S10R39	**220**	**K**	**0**	**R**	**BU10**	

220= 22µH	**K=** Tol. 10%	**0=** No function	**R=** ROHS conform	**BU=** Bulk Ware
	J= Tol. 5%		**N=**NON ROHS conform	**TY=** Tray Package

THT Radial Extremly High Current

Part No.: **S10R39**

Customer:

DRW:	Jason	CHKD	Jules	MATL:	Wu	DATE	16.05.2009
APPD:	Join			FINISH	Shieh	Sheet	2 from 2

Copyright by EDCON-COMPONENTS H.Schmitt 20.6.2008

www.edcon-components.com
email: info@edcon-components.com