EDCON COMPONENTS
A MEMBER OF EDCON-GROUP

Technical Specification

Features

Wire Wound Construction
Excellent heat resistance
Excellent environmental characteristics
High reliability

Applications

Power Supplies
SCR and TRIAC Controls
RFI Suppression
Filters
Switching Regulators

Dimensions

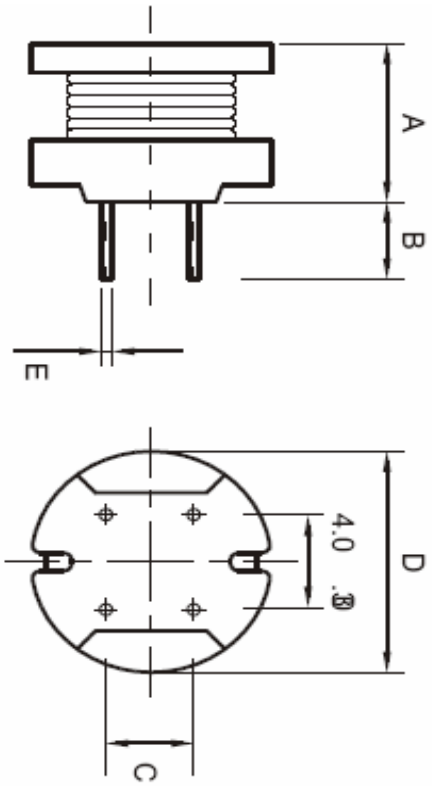

Technical Dimensions			
A (mm)	B (mm)	C (mm)	D (mm)
8,5	3,5 +/-1,0	5,0 +/-0,3	10,5
E (mm)			
0,7			

Electrical Characteristics

Technical Information

Testing LCR Bridge, measured @ 1KHz 0,1V HP4284A Equivalent acceptacle
RDC. QuadTech 1880 Milliohmmeter
IDC: Max. Lowers inductance by 10%
Operating Temperature: -55°C ~ +125°C
Storage Temperature: -55°C ~ +125°C
Solder Methods: Vapor Phase, Infrared Reflow
Shrink tube: Flame retardent UL type VW-1
Marking: Inductance and tolerance
Note: All specifications subject to change without notice.

Inductance	Inductance Code	IDC	DCR max.
270µH	271	0,870A	0,610Ω

,

THT Radial Power Choke

Part No.: **S10R20**

Customer:

DRW:	Jason	CHKD	Jules	MATL:	Wu	DATE	26.04.2009
APPD:	Join			FINISH	Shieh	Sheet	1 from 2

Copyright by EDCON-COMPONENTS H.Schmitt 20.6.2008

www.edcon-components.com
email: info@edcon-components.com

EDCON COMPONENTS
A MEMBER OF EDCON-GROUP

Soldering Profile

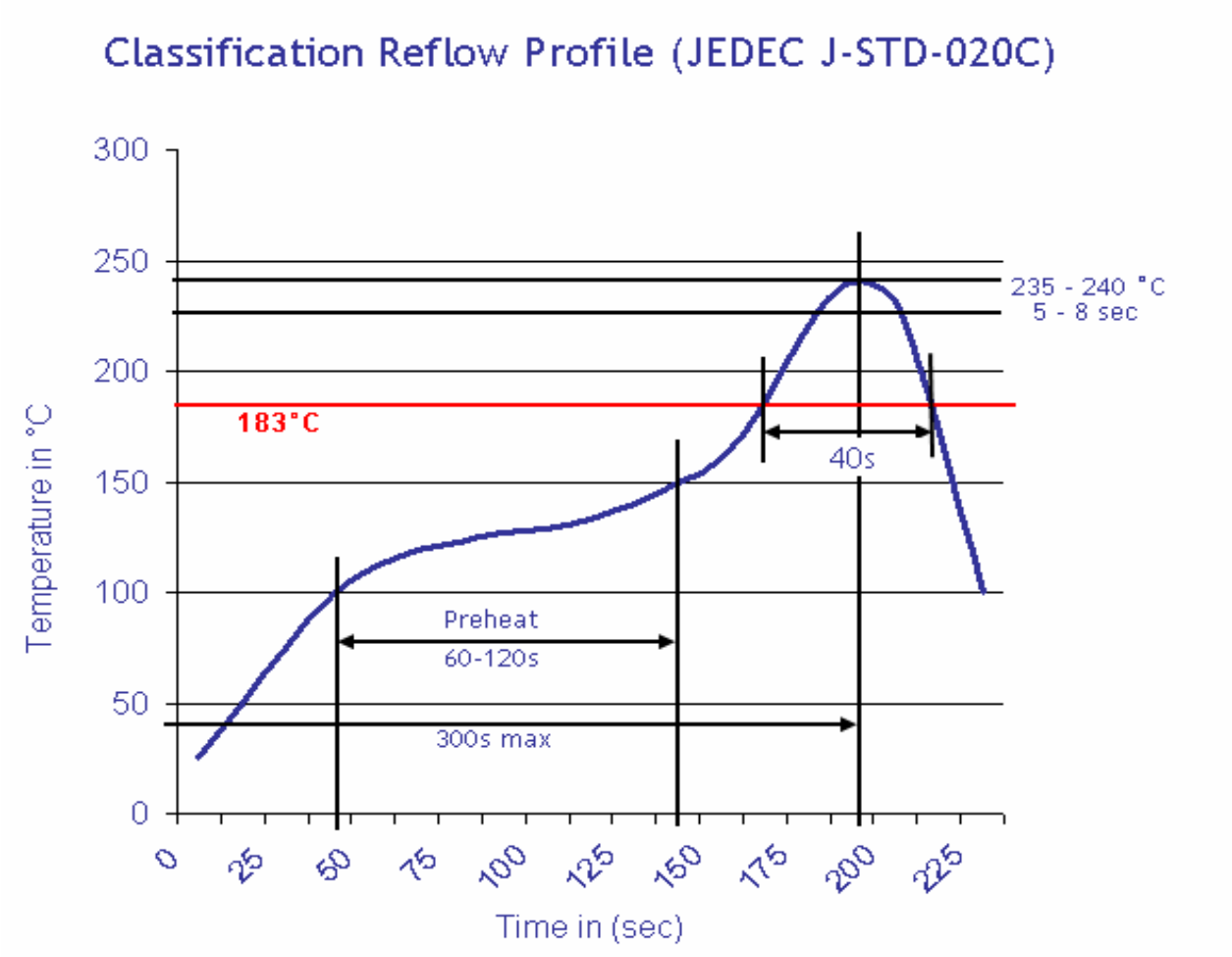

Ordering Information

Serie	Inductance	Tolerance	Lead Length	ROHS	Packing	
S10R20	**271**	**M**	**50**	**R**	**BU10**	

271= 270µH	**M=** Tol. 20%	**50=** 5mm	**R=** ROHS conform
	K= Tol. 10%	**15=** 15mm	**N=**NON ROHS conform

BU= Bulk Ware

TY= Tray Package

THT Radial Power Choke

Part No.: **S10R20**

Customer:

DRW:	Jason	CHKD	Jules	MATL:	Wu	DATE	26.04.2009
APPD:	Join			FINISH	Shieh	Sheet	2 from 2

Copyright by EDCON-COMPONENTS H.Schmitt 20.6.2008

www.edcon-components.com
email: info@edcon-components.com