EDCON-COMPONENTS

Technical Discription

Long Life, easy installation
Green light source, fast reponce

Features

Super Bright
Big Emitting Angle
Superior ESD Protection
Superior UV Responce
Can by equipped with lens

Applications

Small Space lighting
Mechanicel equipments lights

Drawing

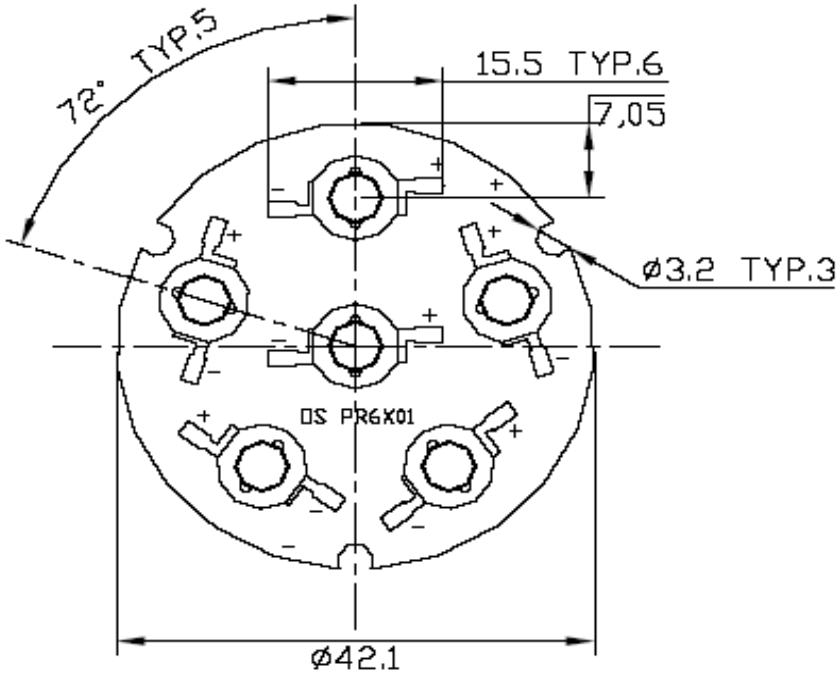

Xeon Power 6Watt LED Module

Part No.: **M32032**

DRW:	Jason	CHKD	Wilson	MATL:	Wilson	TOLERANCE	Mason	DATE	29.01.2012	Customer:
APPD:	Schumi			FINISH	Jamy		Sheet No.		1 from 3	

www.edcon-components.com
email: info@edcon-components.com

Copyright by EDCON-COMPONENTS

EDCON-COMPONENTS

EDCON COMPONENTS
A MEMBER OF EDCON-GROUP

Electrical Informations			
Color	Wavelength or Coordinates	Condition	Overal Luminius Flux (typ)
Blue	470nm	IF=700mA	90lm

Absolute Maximum Ratings (Ta=25°C)			
Items	Symbol	Values	Units
Operating supply range (DC)	Vidc (B,W,G)	12	V
	Vidc (R,Y	9	
Input Current	Ii	800	mA
Power Dissipation	Pa (B,W,G)	9,6	W
	Pa (R,Y)	7,2	
Operating Temperature	Tope	.-10 ~ +40	°C
Storage Temperature	Tstg	.-20 ~ +80	°C

Typical Performance (Ta=25°C)					
Items	Symbol	Min	Typ	Max.	Units
LED Power Module	Pm (B,W,G)	-----	7	9,6	W
	Pm (R,Y)	-----	5,25	7,2	
Input Voltage (DC)	Vi (B,W,G)	-----	10	12	V
	Vi (R,Y)	-----	7,5	9	
Product input Curr.	If	-----	700	800	mA
Beam Patern	BP	-----	120	-----	Deg
PCB Diameter	Lmod	-----	42,1	-----	mm
Net Weigth	Wie.	-----	9,5	-----	g

Xeon Power 6Watt LED Module

Part No.: **M32032**

Customer:

DRW:	Jason	CHKD	Wilson	MATL:	Wilson	TOLERANCE	Mason	DATE	29.01.2012
APPD:	Schumi			FINISH	Jamy		Sheet No.		2 from 3

www.edcon-components.com
email: info@edcon-components.com

Copyright by EDCON-COMPONENTS

Ordering Informations

Serie		Function	ROHS	Packing			
M32032	-	X	R	WC			

X= No function	**R**= ROHS Conform	**WC**= White Carton
	N= NON ROHS Conform	**BP**= Blister Pack

Xeon Power 6Watt LED Module

Part No.: **M32032**

DRW:	Jason	CHKD	Wilson	MATL:	Wilson	TOLERANCE	Mason	DATE	29.01.2012	Customer:
APPD:	Schumi			FINISH	Jamy		Sheet No.		3 from 3	

Copyright by EDCON-COMPONENTS