EDCON-COMPONENTS

Technical Discription

Material: Nylon 66 UL94V-2

Length of Spacer

Length Code	Length (mm) A / B
A01	6,3 / 7,8
A02	9,5 / 7,8
A03	12,7 / 7,8
A04	15,9 / 7,8

Drawing

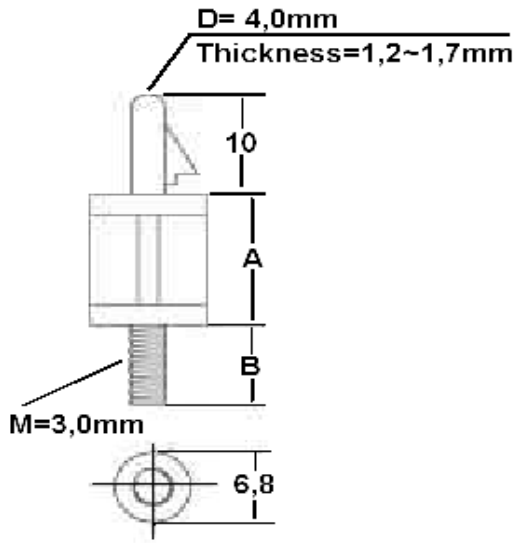

Ordering Informations

Serie	Length Co.	Material	Color	ROHS	Packing
N17020	A01	NY	WH	R	BA101

A01 ~ A04	**NY**= Nylon 66	**WH**= White	**R=** ROHS Conform	**BA101**= Poly Bag 100PCS
	PC= PC		**N=** NON ROHS Conform	**BA102**= Poly Bag 100PCS

PCB Spacer

Part No.: **N17020**

DRW:	Jason	CHKD	Wilson	MATL:	Wilson	TOLERANCE	Mason	DATE	03.05.2009
APPD:	Schumi			FINISH	Jamy		Sheet No.		1 from 1

Customer:

www.edcon-components.com

email: info@edcon-components.com

Copyright by EDCON-COMPONENTS H.Schmitt