EDCON-COMPONENTS

Technical Dicription

Material:	Nylon 66 UL94V-2
	PC
PCB Thickness:	0,8 ~ 2,0mm

Length of Spacer

Length Code	Length (mm)
A01	4,8
A02	6,4
A03	9,6
A04	12,7
A05	15,9
A06	19,1
A07	22,2
A08	11,1
A09	7,9

Length of Spacer

Length Code	Length (mm)
A10	6,0
A11	24,0
A12	25,4
A13	27,5
A14	28,6
A15	31,1
A16	31,7
A17	34,9

Drawing

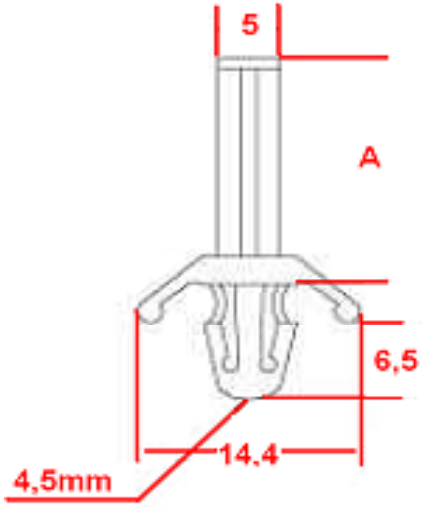

Ordering Informations

Serie	Length Co.	Material	Color	ROHS	Packing
N17015	A01	NY	WH	R	BA101

A01 ~ Axx	**NY**= Nylon 66	**WH**= White	**R=** ROHS Conform	**BA101**= Poly Bag 100PCS
	PC= Poly		**N=** NON ROHS Conform	**BA102**= Poly Bag 100PCS

PCB Spacer

Part No.: **N17015**

DRW:	Jason	CHKD	Wilson	MATL:	Wilson	TOLERANCE	Mason	DATE	10.01.2017
APPD:	Schumi			FINISH	Jamy		Sheet No.		1 from 1

Customer:

www.edcon-components.com

email: info@edcon-components.com

Copyright by S.Tiede