EDCON-COMPONENTS

Technical Dicription

Material: Nylon 66 UL94V-2
PC

Length of Spacer

Length Code	Length (mm)
A01	3,5
A02	5,0
A03	6,4
A04	8,0
A05	9,6
A06	12,0
A07	14,0
A08	16,0

Drawing

PCB-Hole 4,0mm

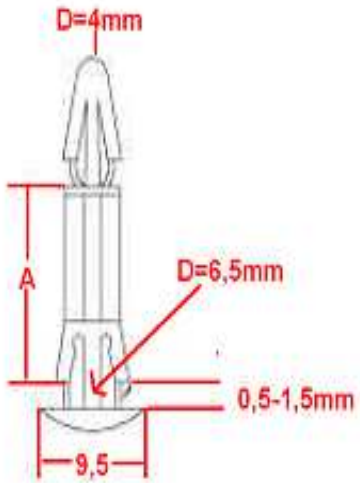

PCB-Hole 6,5mm
PCB-Thickness 0,5-1,5mm

Ordering Informations

Serie	Length Co.	Material	Color	ROHS	Packing
N17014	A01	NY	WH	R	BA101

A01 ~ A08	**NY**= Nylon 66	**WH**= White	**R=** ROHS Conform	**BA101**= Poly Bag 100PCS
	PC= Poly		**N=** NON ROHS Conform	**BA102**= Poly Bag 100PCS

PCB Spacer

Part No.: **N17014**

DRW:	Jason	CHKD	Wilson	MATL:	Wilson	TOLERANCE	Mason	DATE	03.05.2009
APPD:	Schumi			FINISH	Jamy		Sheet No.		1 from 1

Customer:

www.edcon-components.com
email: info@edcon-components.com

Copyright by EDCON-COMPONENTS H.Schmitt