EDCON-COMPONENTS

Technical Dicription

Material: Nylon 66 UL94V-2
PC

Length of Spacer

Length Code	Length (mm)
A01	6,3
A02	8,0
A03	10,0
A04	12,7

Drawing

PCB-Hole 3,0mm
PCB-Thickness 1,2-1,7mm

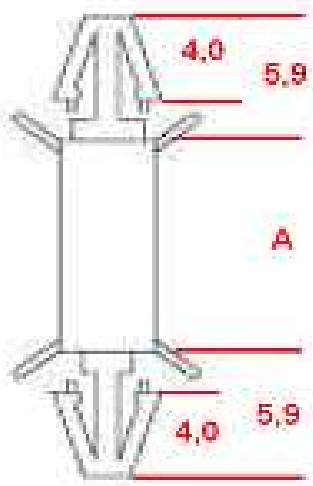

PCB-Hole 3,0mm
PCB-Thickness 1,2-1,7mm

Ordering Informations

Serie	Length Co.	Material	Color	ROHS	Packing
N17013	A01	NY	WH	R	BA101

A01 ~ A04	**NY**= Nylon 66	**WH**= White	**R=** ROHS Conform	**BA101**= Poly Bag 100PCS
	PC= Poly		**N=** NON ROHS Conform	**BA102**= Poly Bag 100PCS

PCB Spacer

Part No.: **N17013**

Customer:

DRW:	Jason	CHKD	Wilson	MATL:	Wilson	TOLERANCE	Mason	DATE	03.05.2009
APPD:	Schumi			FINISH	Jamy		Sheet No.		1 from 1

www.edcon-components.com
email: info@edcon-components.com

Copyright by EDCON-COMPONENTS H.Schmitt