REV.	EC#	DESCRIPTION	DATE	DRAWN	CHECKED	APPROVED
C	SZECR-03803	ADD PIN NUMBER C X4	11/08/03'	HONG	~	TOM

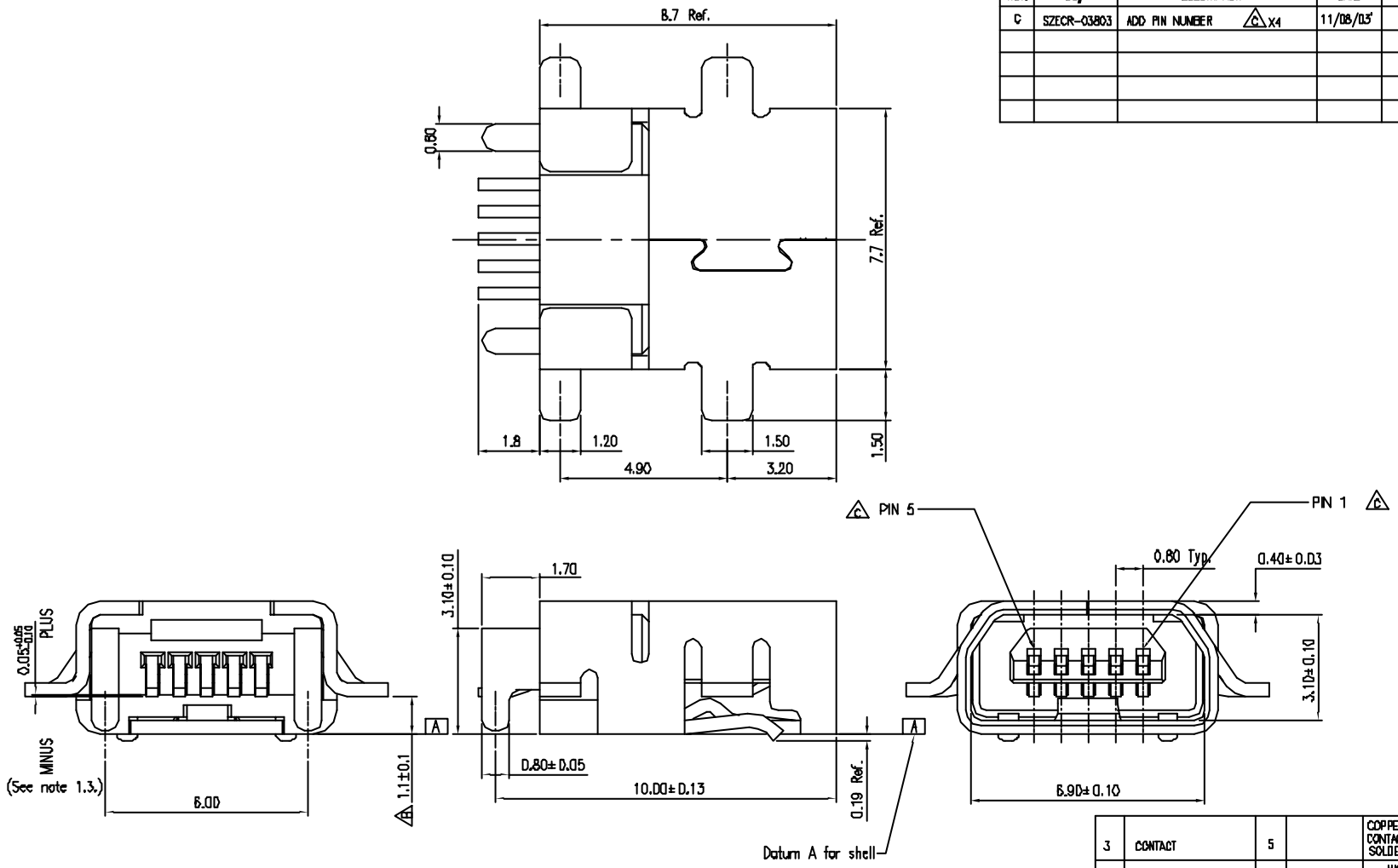

ITEM	NAME	Q'TY	PART#	MATERIAL / FINISH
3	CONTACT	5		COPPER ALLOY/ SEE TABLE A CONTACT AREA: SELECTIVE GOLD PLATING SOLDER TAIL: Tin/Lead over Ni Plated
2	HOUSING	1		HIGH TEMPERATURE THERMOPLASTIC, GLASS FIBER, 94V-0 RATED
1	SHELL	1		COPPER ALLOY/Matt Tin over Copper

TOLERANCES UNLESS OTHERWISE SPECIFIED
GENERAL: X. ±0.25 .X ±0.20 .XX ±0.13 .XXX ±0.08
ANGLES: X° ±0.5° .X° ±0.25° .XX° ±1.0°

SCALE 8 : 1
SHEET 1 OF 2
UNIT mm

		DATE
DRAWN	Jacky	09/17/02'
DESIGN	Stanly	04/18/02'
CHECKED	Tom	09/19/02'
APPROVED	Tom	09/19/02'

CUSTOMER DRAWING

ACON ADVANCED—CONNECTEK INC.

TITLE: MINICONN. MINI USB
MINI-AB, RECEP. SMT. REVERSE

SERIES: MINE40 SERIES
SIZE: A3
DWG NO.: C-MINE40-00-00
REV.: C

This document and information contained herein are the property of Advanced Connectek Inc., copies are issued in strict confidence and shall not be reproduced or copied, or used as the basis of manufacture or sale of apparatus without permission

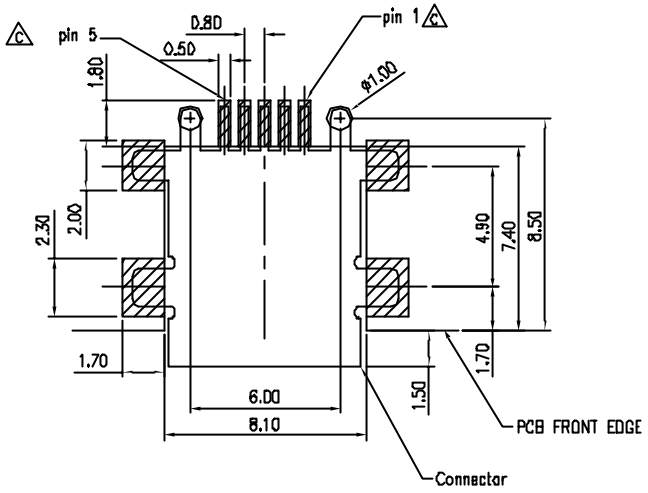

FIGURE A : Printed Circuit Board (PCB) Layout(SCALE 5 : 1)

1.0. OTHERS :
1.1. PRODUCT SPECIFICATION : CSP-MNC10-00-00
1.2. RECOMMENDED PC BOARD THICKNESS 0.80mm
1.3. SHELL AND CONTACT COPLANARITY IS 0.10 MAX.
1.4. RECOMMENDED PC BOARD MOUNTING DIMMENSION : REFER FIGURE A

TABLE A: PRODUCT NUMBERING CODE:

MNE40-5 * * * 1 0
① ② ③ ④ ⑤ ⑥ ⑦

① MNE40: MINI USB MINI-AB R/A SMT REVERSE LOW PROFILE TYPE

② POSITION NO.
5: 5 POS.

③ COLOR OF INSULATOR:
G: PANTONE 424C

④ CONTACT PLATING:
5: Au 30u"

⑤ SHELL PLATING
L: Matt TIN PLATED

⑥ MATERIAL OF INSULATION:
1: PA-6T

⑦ Package :
0 : Tape & Reel

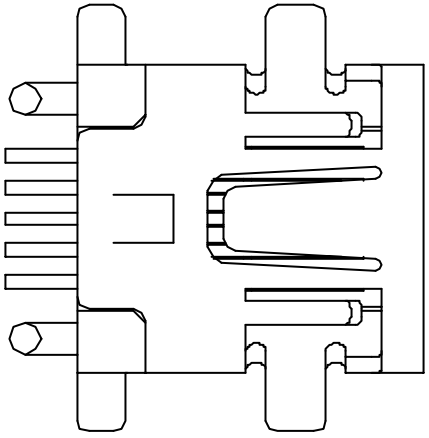

Bottom View

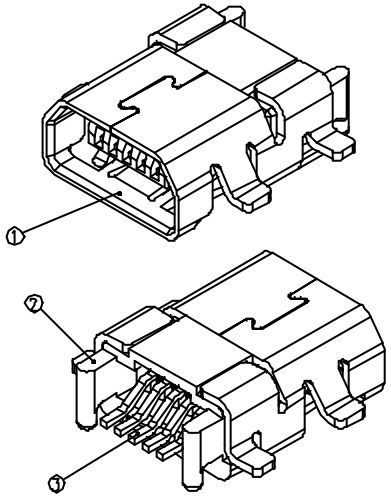

(SCALE 5 : 1)

TOLERANCES UNLESS OTHERWISE SPECIFIED GENERAL X. ±0.30 .X ±0.25 .XX ±0.10 .XXX ±0.05 ANGLES X° ±5.0° .X° ±2.0° .XX° ±1.0°	DRAWN Jacky DATE 09/17/02'	ACON ADVANCED-CONNECTEK INC.	
	DESIGN Stanly DATE 04/18/02'	TITLE MINICONN. MINI USB MINI-AB, RECEP. SMT. REVERSE	
SCALE 8 : 1	CHECKED Tom DATE 09/19/02'		
SHEET 2 OF 2	APPROVED Tom DATE 09/19/02'	SERIES MNE40 SERIES	SIZE A3
UNIT mm	CUSTOMER DRAWING	DWG NO. C-MNE40-00-00	REV. C

This document and information contained herein are the property of Advanced Connectek Inc., copies are issued in strict confidence and shall not be reproduced or copied, or used as the basis of manufacture or sale of apparatus without permission