EDCON COMPONENTS
A MEMBER OF EDCON-GROUP

Technical Specification

Electrical Characteristics

Standard Resistance Range: 10Ω to 2,0MΩ

Standard Resistance Tolerance: 10% is Standard
Tighter Tolerance Available
Absolute Minimum Resistance: 1% or 2 Ohms max. whichever is greater
Contact Resistance Variation: 3% or 3Ohms max. whichever is greater
Resolution: Infinite
Insulation Resistance: R1 ≥ 1000MΩ min.
Dilectric Strength: 101,3KPa 600VAC 8,5KPa 250Vac
Adjustability: Voltage +/- 0,05% Resistance +/-0,15%
Effektive Travel: 300° normal

Environmental Characteristics

Power Rating: (200Volts max.)
0,5Watt/ 70°C / 0Watt / 125°C
Temperature Range: -55°C ~ +125°C
Temperature Coeffizient: +/-100ppm/°C
Vibration: 98m/s² (1%Δ TR;1%Δ VR)
Shock 390m/s² (1%Δ TR;1%Δ VR)
Load Life: 4000hrs 0,5W @ 70°C
(3% Δ TR; 3% or 3 Ohms).
Rotational Life: 200cycles (3% Δ TR; 3% or 3 Ohms). whichever is greater, CRV

Physical Characteristics

Flammability: UL94V-0
Torque: 35nM * m max.
Stop Strength: 50nm * m min.
Terminals: Solderable Pins

Technical Dimensions Type 3386 B

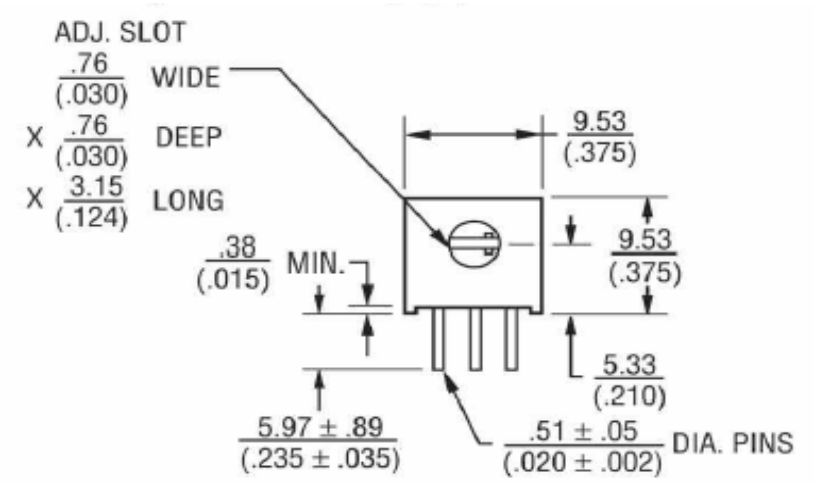

PCB Layout

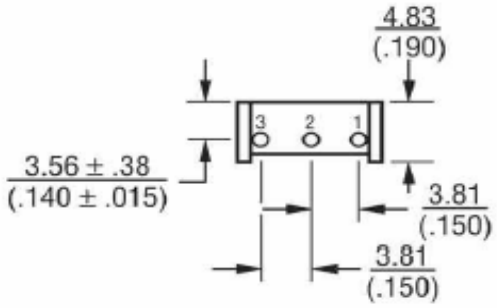

Physical Structure

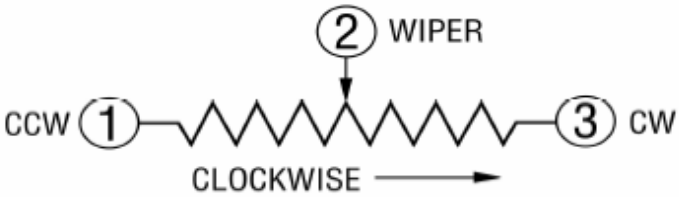

9,5mm THT Single-Turn Trimmer Type 3386B

Serie No.: **X22001**

Customer:

DRW:	Jason	CHKD	Jules	MATL:	Wu	DATE	06.09.2009
APPD:	Join			FINISH	Shieh	Sheet	1 from 3

Copyright by EDCON-COMPONENTS H.Schmitt

www.edcon-components.com
email: info@edcon-components.com

EDCON COMPONENTS
A MEMBER OF EDCON-GROUP

Range Code Table

Ordering Code	Range
100	10Ω
200	20Ω
500	50Ω
101	100Ω
201	200Ω
501	500Ω
102	1,0KΩ
202	2,0KΩ
502	5,0KΩ
103	10KΩ
203	20KΩ
253	25KΩ
503	50KΩ
104	100KΩ
204	200KΩ
254	250KΩ
504	500KΩ
105	1,0MΩ
205	2,0MΩ

9,5mm THT Single-Turn Trimmer Type 3386B

Serie No.: **X22001**

Customer:

DRW:	Jason	CHKD	Jules	MATL:	Wu	DATE	06.09.2009
APPD:	Join			FINISH	Shieh	Sheet	2 from 3

Copyright by EDCON-COMPONENTS H.Schmitt

www.edcon-components.com
email: info@edcon-components.com

EDCON COMPONENTS
A MEMBER OF EDCON-GROUP

Soldering Profile

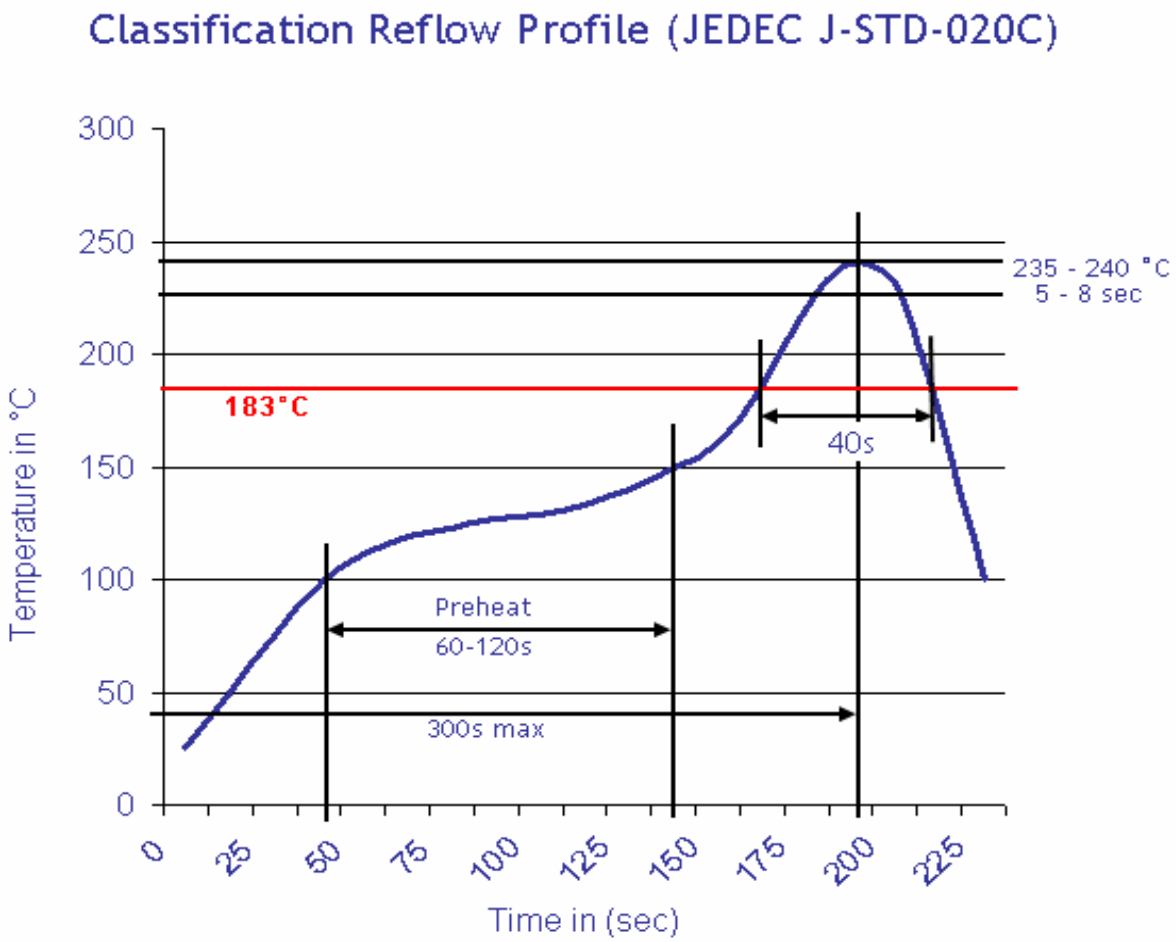

Ordering Information

Serie	Ordering Code	Tolerance	ROHS	Packing		
X22001	**100**	**M**	**R**	**BU101**		

100= 10Ω	**M=** Tol. 20%	**R=** ROHS conform	**BU101=** Bulk-Ware 100PCS
	K= Tol. 10%	**N=**NON ROHS conform	**TU=** Tube Packing

						9,5mm THT Single-Turn Trimmer Type 3386B	
						Serie No.:	**X22001**
						Customer:	
DRW:	Jason	CHKD	Jules	MATL:	Wu	DATE	06.09.2009
APPD:	Join			FINISH	Shieh	Sheet	3 from 3

Copyright by EDCON-COMPONENTS H.Schmitt

www.edcon-components.com
email: info@edcon-components.com