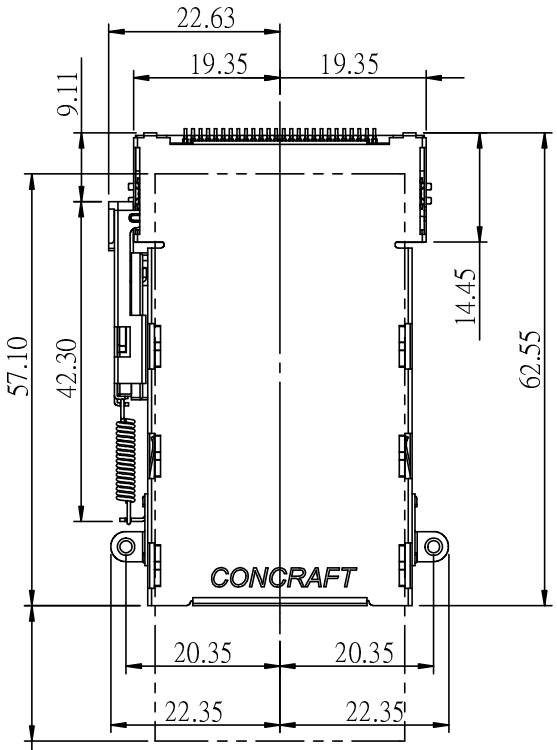

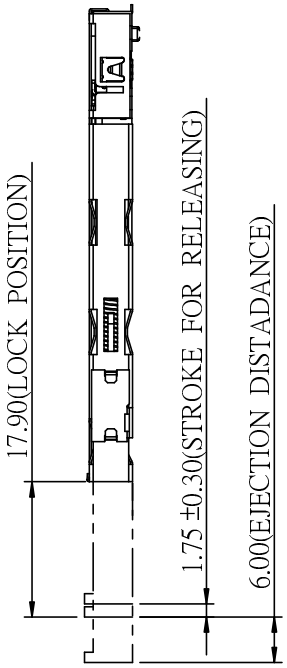

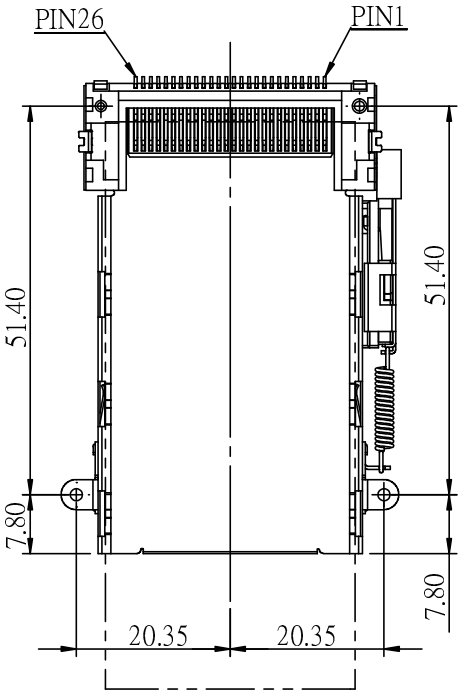

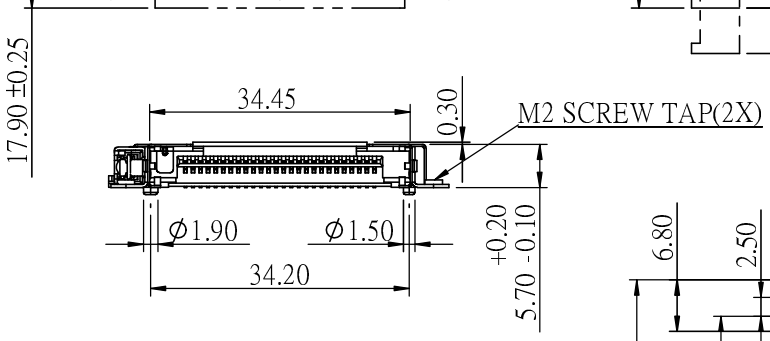

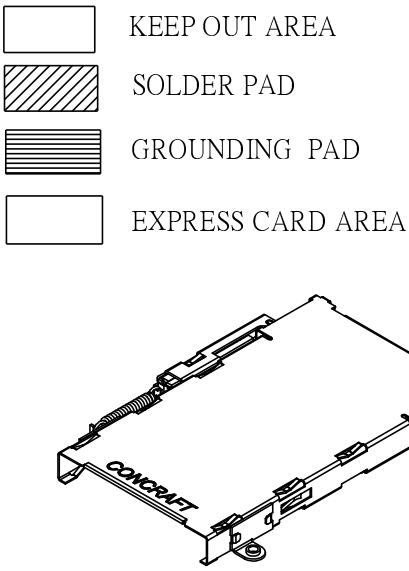

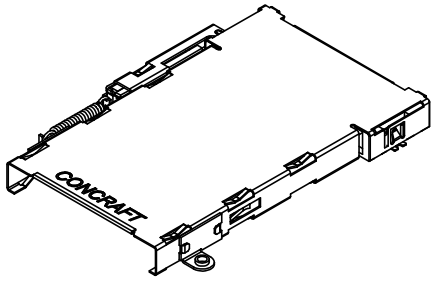

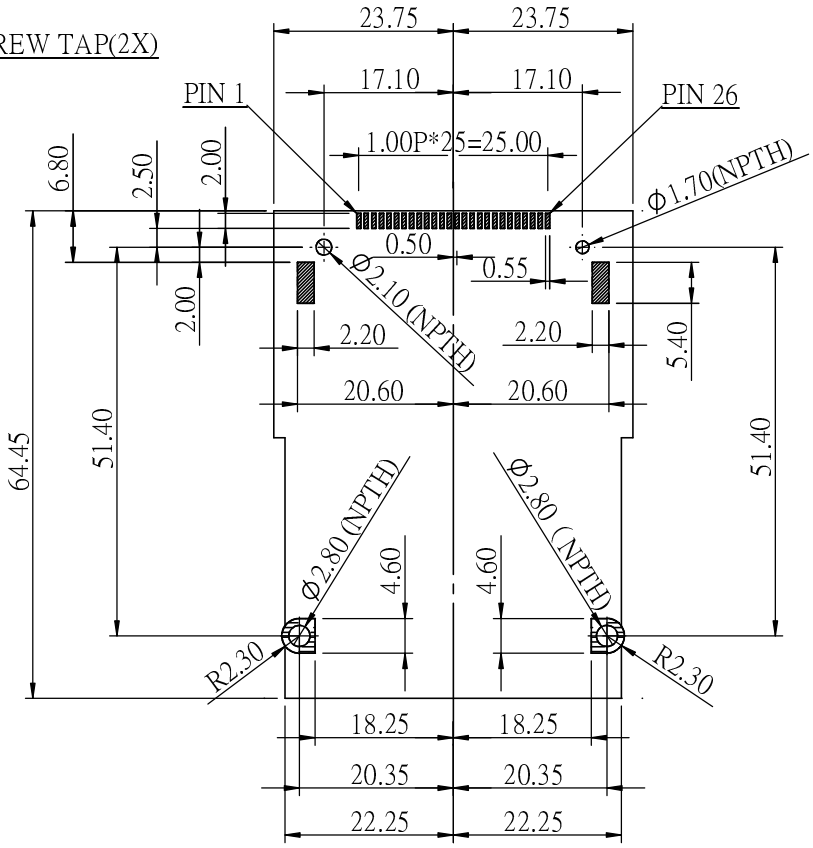

RECOMENDED PCB SOLDER PAD
TOLERANCE:±0.05

				GENERAL TOLERANCE		DRAW: JED	PART N0: 102E000CBBA000A
				X. ±0.30 .X ±0.20 .XX ±0.10 .XXX ±0.05	X.° ± 2.00° .X° ± 1.00° .XX° ± 0.50°	CHECKED:	TITLE: Express card normal type conn. W=34.0mm,no stand-off
A	E090069A	JED	03/30/2009	UNITS: mm	DATE: 03 /30 / 2009	APPROVE:	DRAWING NO: 102E000CBBA000A
REV.	ECO NO.	DRAW.	DATE				
MATERIAL:		FINISH:	SCALE: 1 / 1	SHEET: 1 / 1	REV. A	CONCRAFT DRAGONSTATE TECHNOLOGY CO., LTD	