Contact

DATA SHEET

1Port RJ-Connector SIDE-Entry 8P8C w. LED / Magnetic

Serie: T91A21072 -

DRW:	Jason	CHKD	Wilson	MATL:	Wilson	TOLERANCE	Mason	DATE	14.07.2025	1Port RJ-Connector SIDE-Entry 8P8C w. LED / Magnetic
APPD:	Schumi			FINISH	Jamy		Sheet No.		1 from 5	Serie No.: T91A21072 -
										Customer:

Copyright by EDCON-COMPONENTS

EDCON-COMPONENTS

Contact

Techincal Description

NOTES:

1. Designed to support application, such as SOHO(ADSL modems), LAN-on-Motherboard(LOM), hub and Switches.
2. Meets IEEE 802.3 specification
3. Connector Materials:
   Housing:Thermoplastic UL94V-0
   Contact/Shield: Copper alloy
   Shield plating: Nickel
   Contact plating: Gold 6 micro-inches min. In contact area.
4. Wave solder tip temperature: 265℃ Max
   Wave solder tip temperature time: 5 Sec Max

Electrical Specification @25℃

1. Turns Ratio (±2%) :
   TX=1CT:1CT RX=1CT:1CT
2. Inductance OCL: 350uH Min
   @100KHz, 100mV 8mADC bias current
3. Insertion Loss:
   -1.2dB Max @0.3-65MHz
4. Return Loss(dB Min):
   1-30MHz:-18 40MHz:-16dB
   50MHz:-14dB 60-80MHz:-12dB
5. Crosstalk:
   0.3-80MHz:-30dB Min
6. Common Mode Rejection:
   1-150MHz:-50dB Min
7. Isolation Voltage: 1500Vrms
8. Operating Temperature: 0℃～70℃

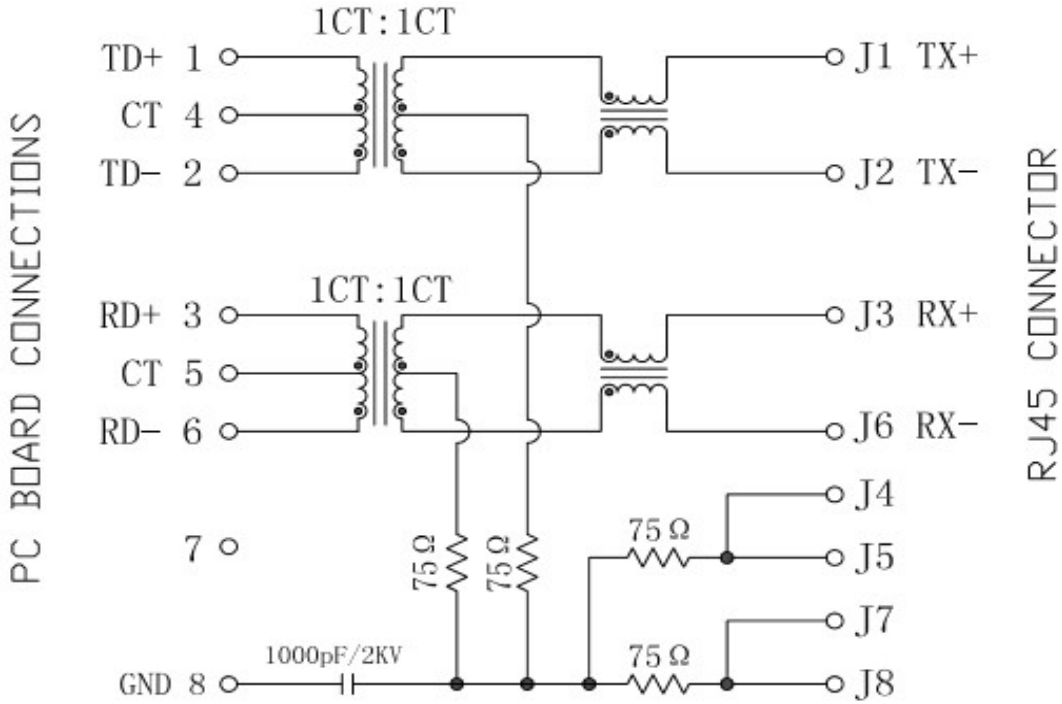

Tolerances unless otherwise specified (mm)				
x	x.x	x.xx	x.xxx	Angle
±	±	±	±	±3°

1Port RJ-Connector SIDE-Entry 8P8C w. LED / Magnetic

Part No.: **T91A21072 -**

Customer:

DRW:	Jason	CHKD	Wilson	MATL:	Wilson	TOLERANCE	Mason	DATE	14.07.2025
APPD:	Schumi			FINISH	Jamy		Sheet No.		2 from 5

www.edcon-components.com

email: info@edcon-components.com

Copyright by EDCON-COMPONENTS

EDCON-COMPONENTS

Contact

Technical Drawing

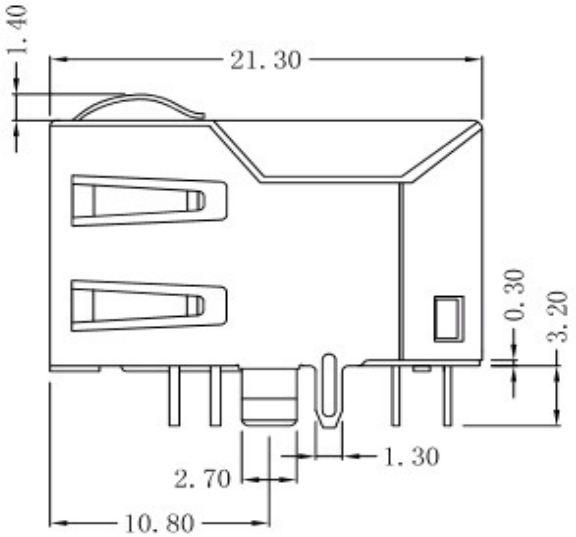

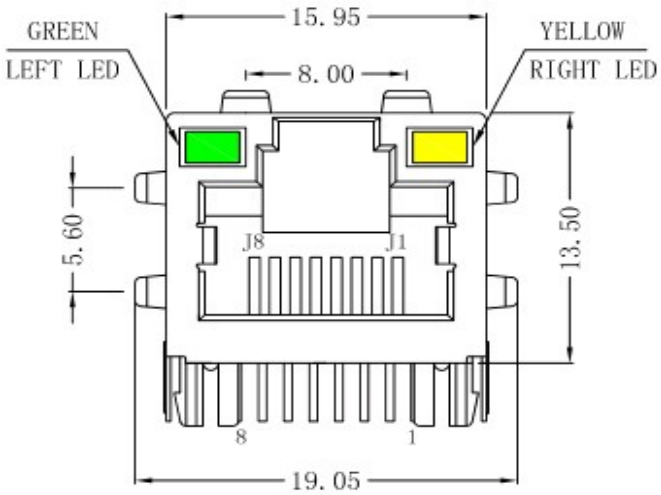

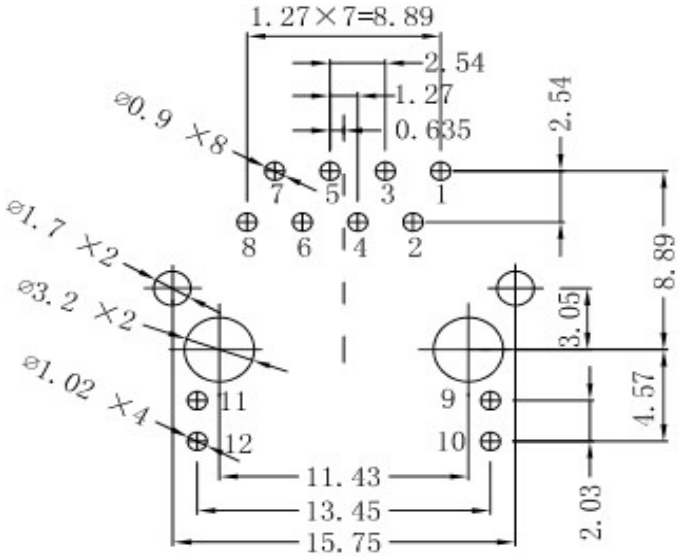

PCB-View Component Side (mm)

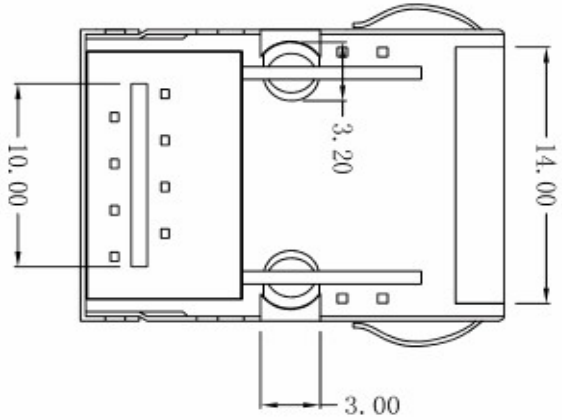

1Port RJ-Connector SIDE-Entry 8P8C w. LED / Magnetic

Part No.: **T91A21072 -**

Customer:

DRW:	Jason	CHKD	Wilson	MATL:	Wilson	TOLERANCE	Mason	DATE	14.07.2025
APPD:	Schumi			FINISH	Jamy		Sheet No.		3 from 5

www.edcon-components.com

email: info@edcon-components.com

Copyright by EDCON-COMPONENTS

EDCON-COMPONENTS

Contact

Ordering Informations

Serie	No of Positions	No of Contacts	Contact Plating	LED Left Side	LED Right Side	Special function	ROHS	Packing Code		
T91A21072 -	**08**	**08**	**GF**	**B1**	**A1**	**N**	**R**	**TY**		

08= Positions	**08=** Contacts	**GF=** Gold Flash (Standard)	**B1=** Green	**A1=** Yellow	**N=** No function	**R=** RoHS Conform	**BU=** Bulk Ware
		GA= 3µ Gold	**A1=** Yellow	**B1=** Green		**N=** NON RoHS Conform	**TA=** Tape Ammo Pack
		GB= 6µ Gold					**TR=** Tape Reel Packing when need w. PIC and PLACE CAP
		GC= 15µ Gold					
		GD= 30µ Gold					
		GE= 50µ Gold					

1Port RJ-Connector SIDE-Entry 8P8C w. LED / Magnetic

Part No.: **T91A21072 -**

Customer:

DRW:	Jason	CHKD	Wilson	MATL:	Wilson	TOLERANCE	Mason	DATE	14.07.2025
APPD:	Schumi			FINISH	Jamy		Sheet No.		4 from 5

www.edcon-components.com

email: info@edcon-components.com

Copyright by EDCON-COMPONENTS

Contact

A MEMBER OF EDCON-GROUP

Soldering Profile Curve

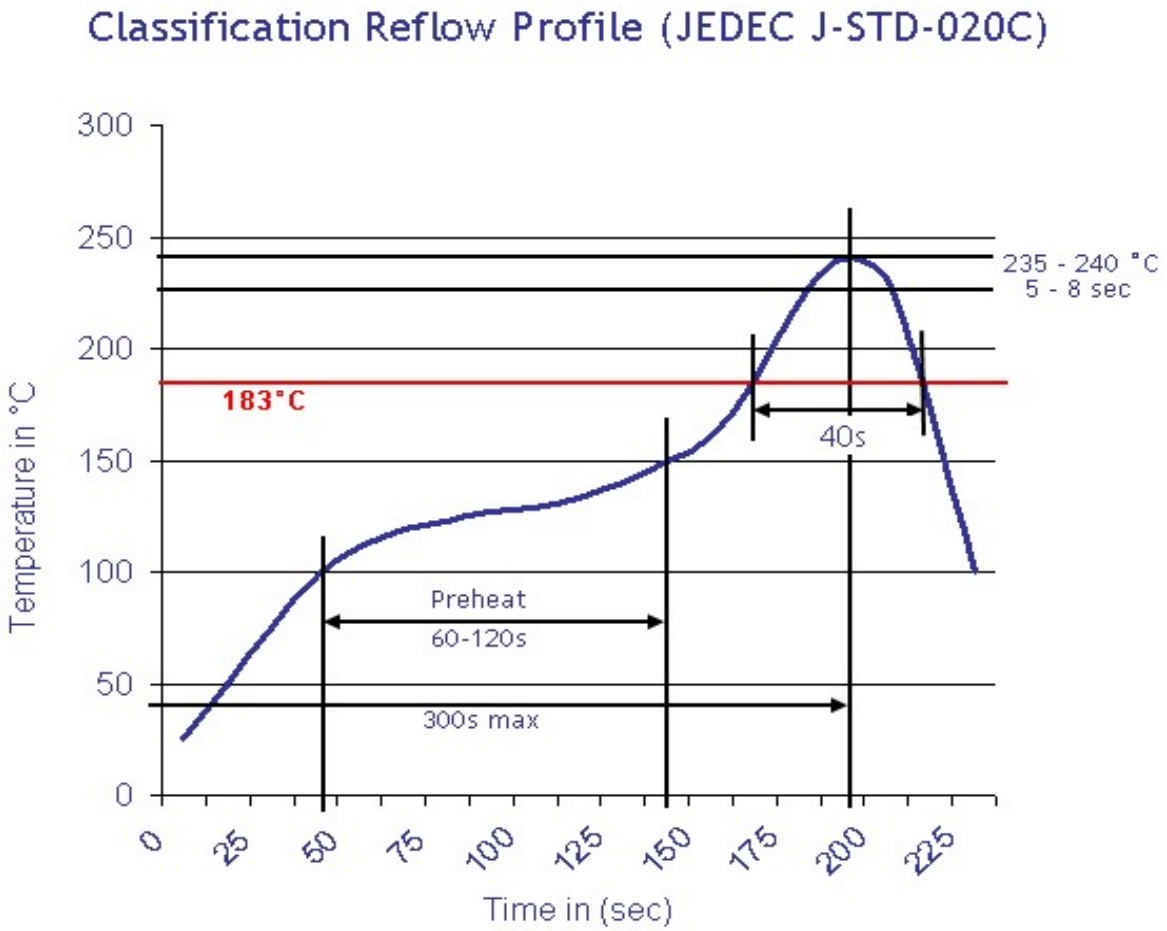

1Port RJ-Connector SIDE-Entry 8P8C w. LED / Magnetic

Part No.: **T91A21072 -**

Customer:

DRW:	Jason	CHKD	Wilson	MATL:	Wilson	TOLERANCE	Mason	DATE	14.07.2025
APPD:	Schumi			FINISH	Jamy		Sheet No.		5 from 5

Copyright by EDCON-COMPONENTS